# Außengewinde BSP 60º innen schweißbar

Edelstahl AISI 316-L



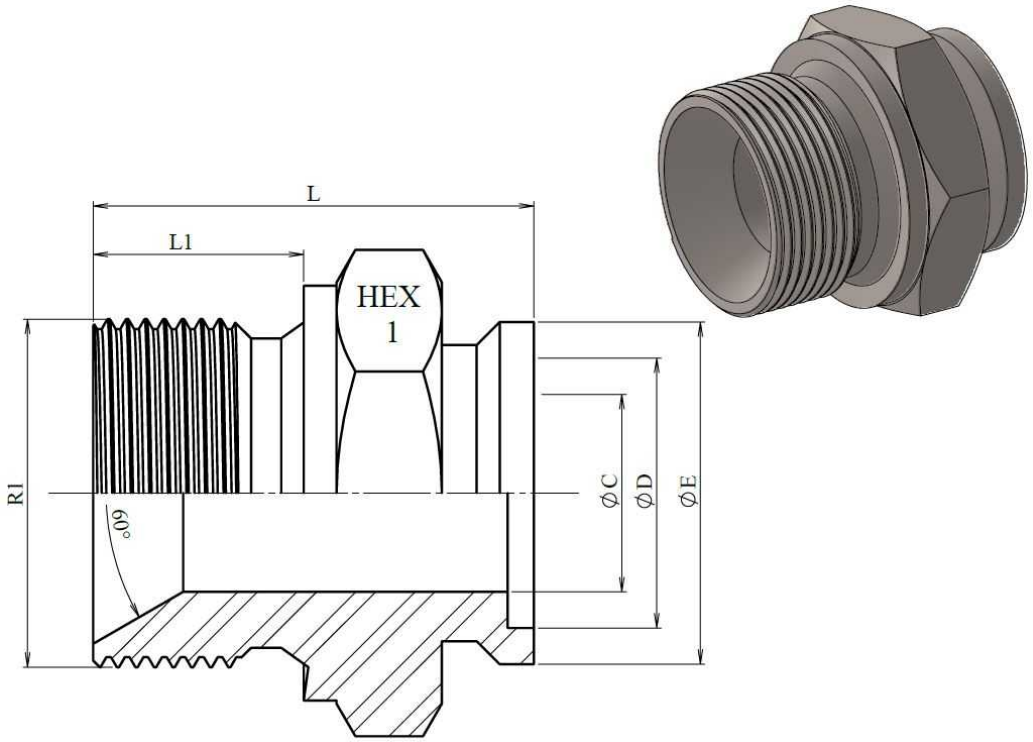


| Artikel | DN | R1 | L | L1 | HEX 1 | ØC | ØD | ØE |
|---|---|---|---|---|---|---|---|---|
| **Z1035104** | 1/4" | 1/4" BSP | 24,5 | 11 | 19 | 6 | 8,2 | 12 |
| **Z1035106** | 3/8" | 3/8" BSP | 26 | 12 | 22 | 8 | 12,3 | 16 |
| **Z1035108** | 1/2" | 1/2" BSP | 28,5 | 14 | 27 | 11 | 14,3 | 21 |
| **Z1035112** | 3/4" | 3/4" BSP | 33,5 | 16 | 32 | 15 | 20,5 | 26 |
| **Z1035116** | 1" | 1" BSP | 37,5 | 19 | 41 | 22 | 25,3 | 32 |
| **Z1035120** | 1"1/4 | 1"1/4 BSP | 44 | 20 | 50 | 26 | 30,3 | 40 |
| **Z1035124** | 1"1/2 | 1"1/2 BSP | 44 | 22 | 55 | 32 | 38,3 | 46 |
| **Z1035132** | 2" | 2" BSP | 52 | 25 | 65 | 46 | 50,3 | 60,2 |