S.S. Verschlussverschr. Innensechskant NPT

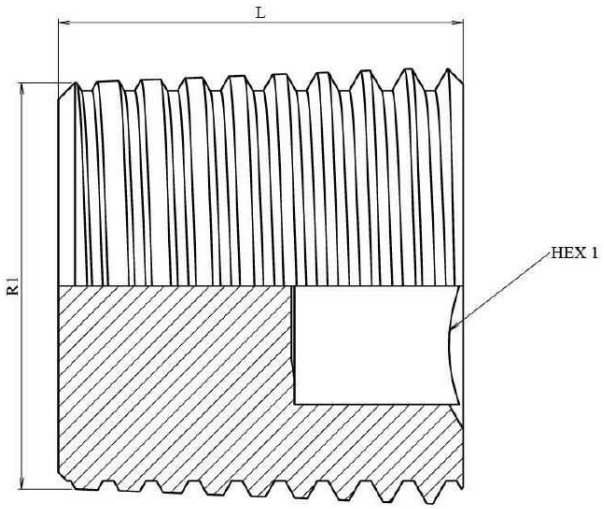

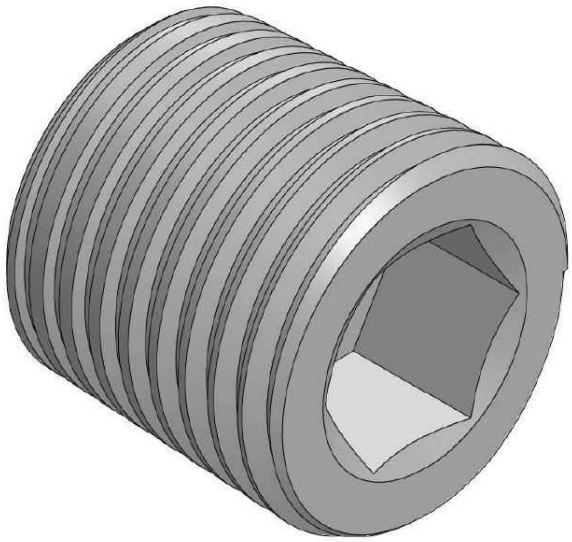

Artikel	GEWINDE	LONGITUD TOTAL	HEXAGONAL 1
ZN107104	1/4" NPT	12.10	6.45
ZN107106	3/8" NPT	12.10	8
ZN107108	1/2" NPT	16	9.5
ZN107112	3/4" NPT	16.3	12
ZN107116	1" NPT	21.1	17