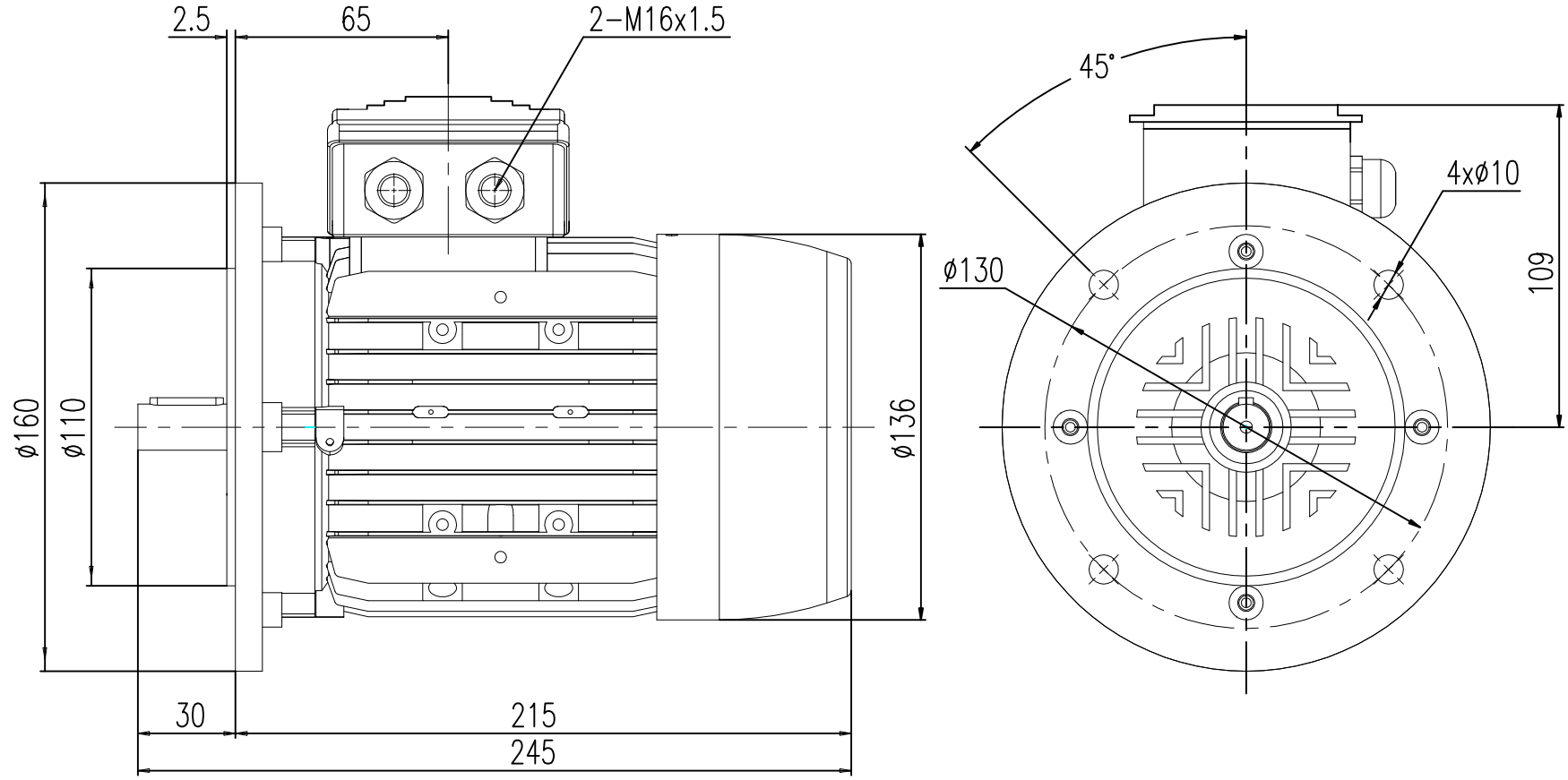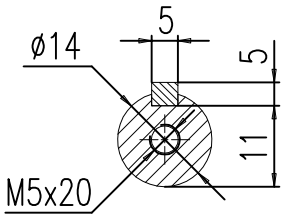MET0.33B3B5 H / MET0.5B3B5 H