Hydraulic motors

Steering units

Steering units open center with valves

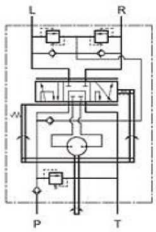

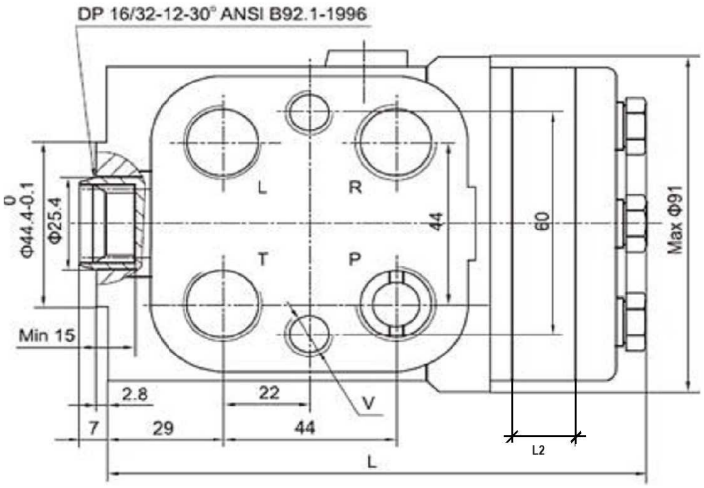

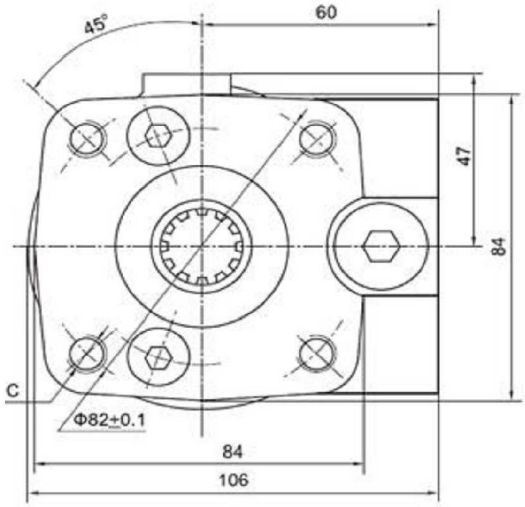

R1: L, P, R, T

Press.relief v.tared 140 bar

Shock valves 200 bar

With suction valves

Part nº	R1	Max. Press. (bar)	cm³/ rev	L	L2
MOSPC 50 ON	1/2'' BSP	175	50	131	6,5
MOSPC 80 ON	1/2'' BSP	175	80	135	10,4
MOSPC 100 ON	1/2" BSP	175	100	138	13
MOSPC 125 ON	1/2'' BSP	175	125	141	16,2
MOSPC 160 ON	1/2'' BSP	175	160	146	20,8
MOSPC 200 ON	1/2'' BSP	175	200	151	26
MOSPC 250 ON	1/2'' BSP	175	250	157	32,5
MOSPC 315 ON	1/2'' BSP	175	315	167	40,9
MOSPC 400 ON	1/2'' BSP	175	400	177	0,52

The information gathered in this technical documentation (Catalogue) has an informative character and can be modified without previous notice. DICSA will not accept any type of responsibility resulting from an inappropriate use of the product, except the ones related to manufacturing defects.