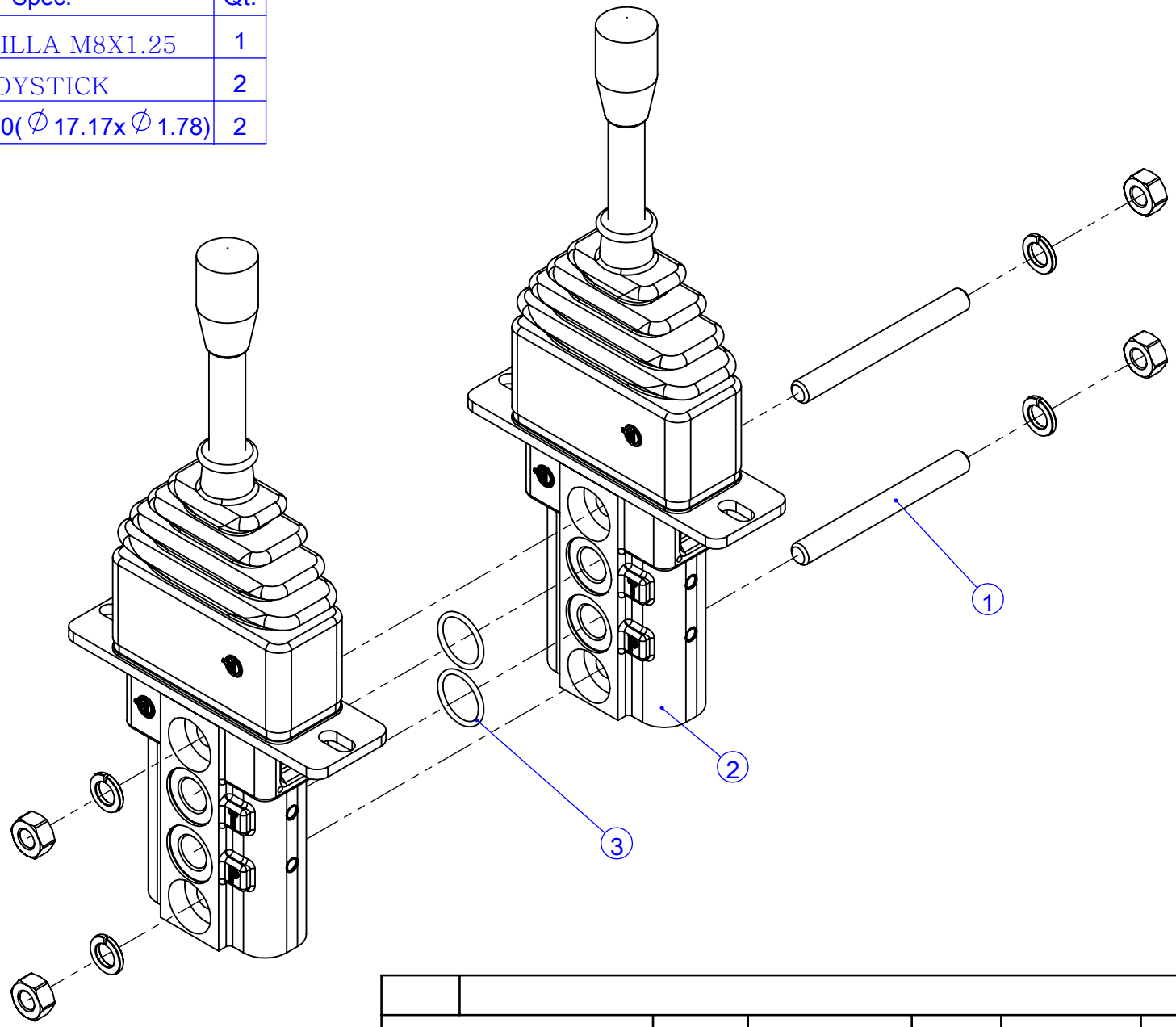No.	Code	Spec.	Qt.
1		VARILLA M8X1.25	1
2		JOYSTICK	2
3		AAS017 N70(∅17.17x∅1.78)	2