OLD

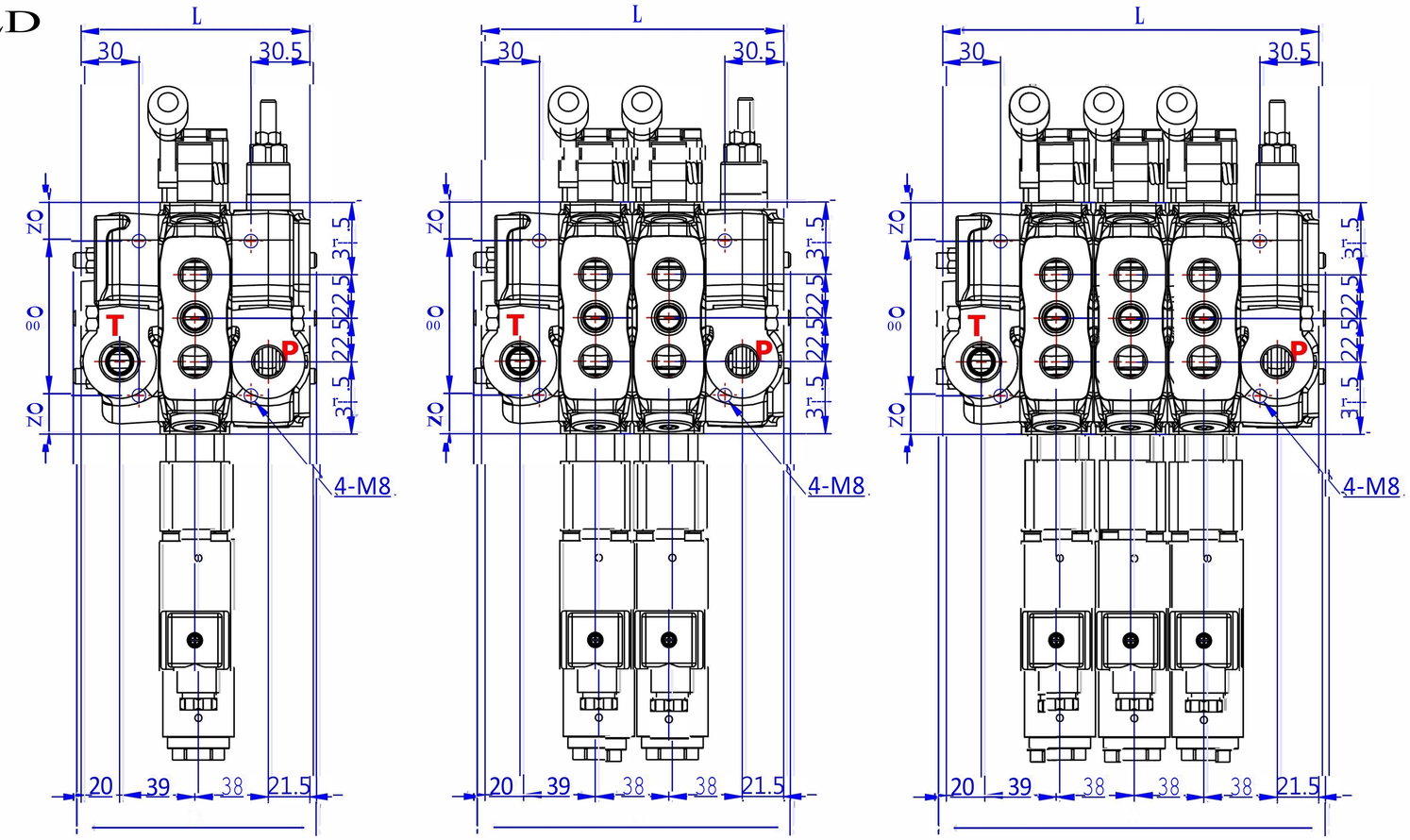

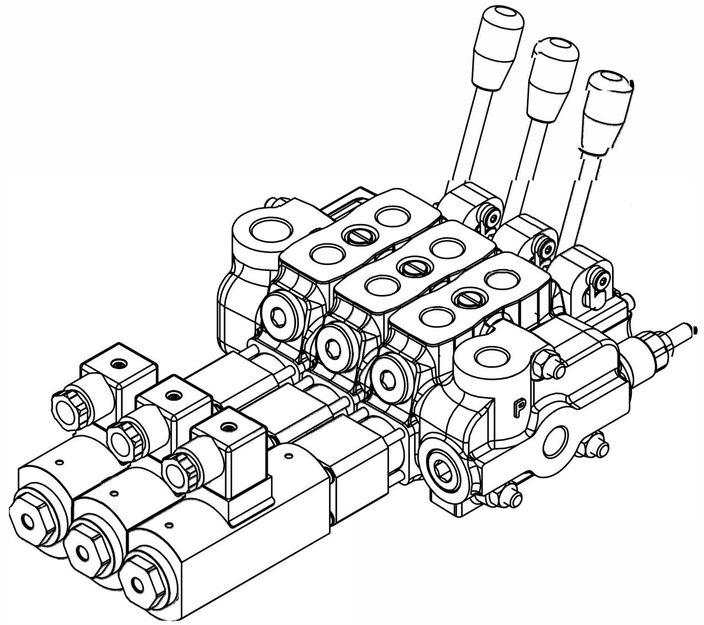

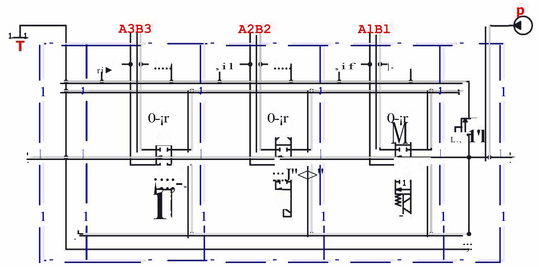

OLD

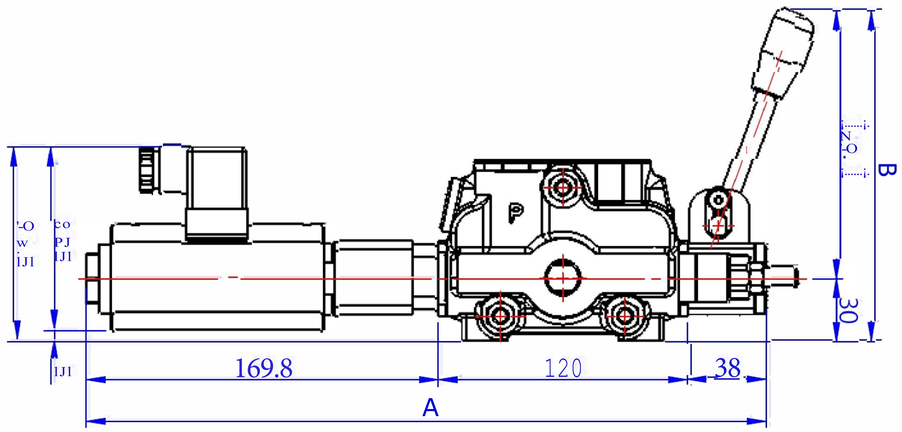

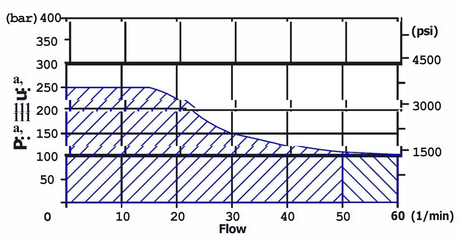

Torque:
Tie rod kits : 300 Kgf-cm
Screws A , B side: 68+-2 kgf-cm

Nominal flow rating		50 L/min	13 USgpm
Operating pressure (Max.)		315 bar	4600 psi
Back pressure (Max.)	on outlet port T	25 bar	360 psi
Fluid temperature	with NBR seals	-20°C - 80°C	-4°F - 176°F
	with FPM seals	-20°C - 100°C	-4°F - 212°F
Viscosity	Operating range	15mm²/s - 75mm²/s	15 - 75 cst
	Max.	400mm²/s	400 cst
	Min.	12mm²/s	12 cst
Ambient temperature		-40°C - 60°C	-40°F - 140°F

Standard threads

PORTS	BSP	UN-UNF	METRIC
Inlet P	G3/8	7/8-14 (SAE 10)	M18x1.5
A and B ports	G3/8	3/4-16 (SAE 8)	M18x1.5
Outlet T and power beyond C	G 1/2	7/8-14 (SAE 10)	M22x1.5

NEW

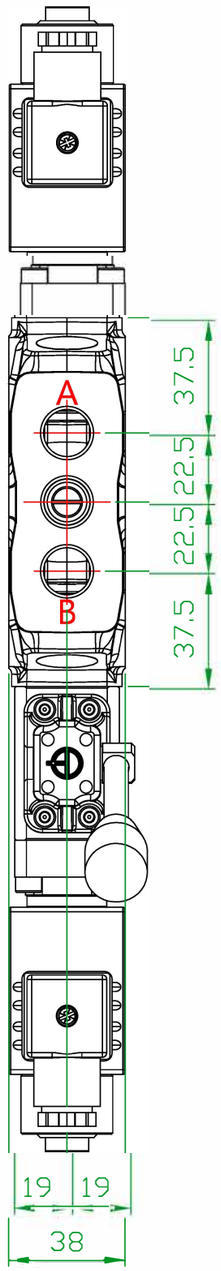

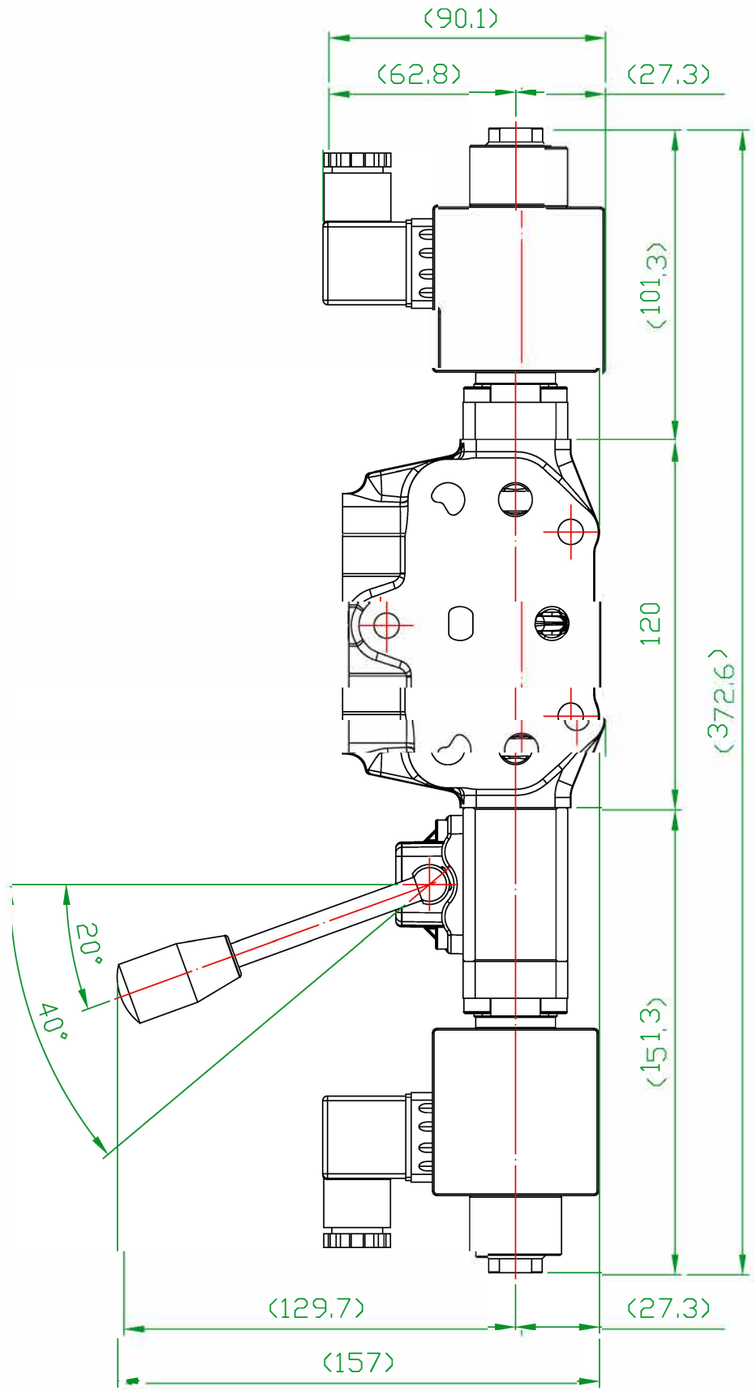

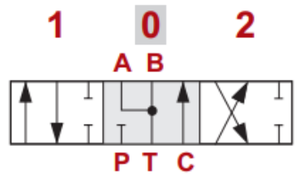

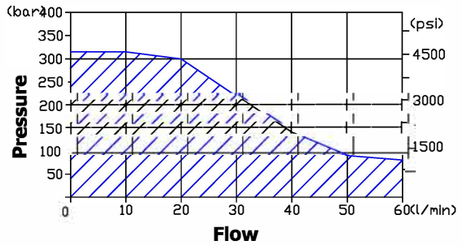

線圈規格		
Sanard Voltage 電壓	12VDC	24VDC
Electric Power 功率	60W	60W
Protection Class 防護等級	IP65	IP65

Nominal flow rating 流量		50 L/min	13 US gpm
Operating pressure (Max.) 使用壓力(最大)		315 bar	4600 psi
Back pressure (Max.) 背壓(最大)	on outlet port T 回油口T	25 bar	360 psi
Fluid temperature 流體溫度	with NBR seals O環(NBR)	-20˚C ~ 80˚C	-4˚F ~ 176˚F
	with FPM seals O環(FPM)	-20˚C ~ 100˚C	-4˚F ~ 212˚F
Viscosity 黏度係數	Operating range 建議使用範圍	15mm^2/s ~ 75mm^2/s	15 ~ 75 cst
	Max. 最大	400mm^2/s	400 cst
	Min. 最小	12mm^2/s	12 cst
Ambient temperature 環境溫度範圍		-40˚C ~ 60˚C	-40˚F ~ 140˚F

Standard threads 螺紋規範

PORTS 口位	BSP
A and B ports 工作口	G 3/8

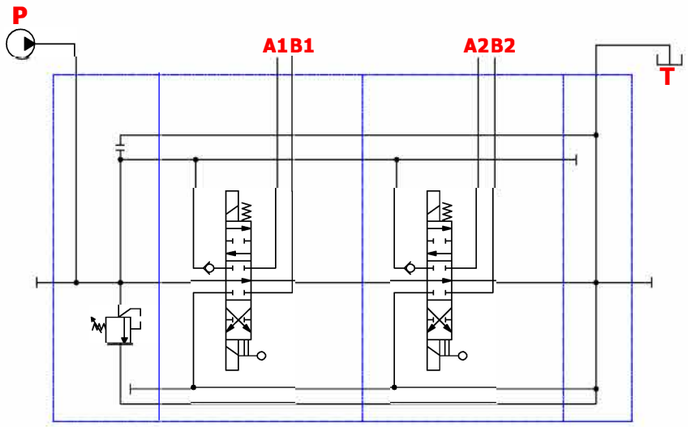

NEW

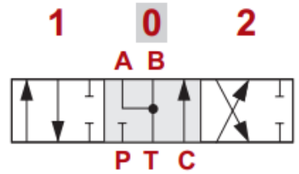

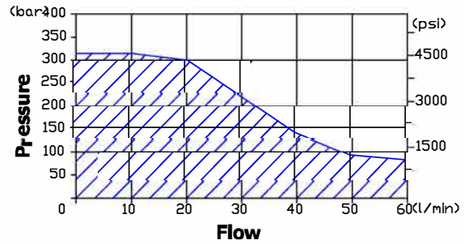

線圈規格		
Sanard Voltage 電壓	12VDC	24VDC
Electric Power 功率	60W	60W
Protection Class 防護等級	IP65	IP65

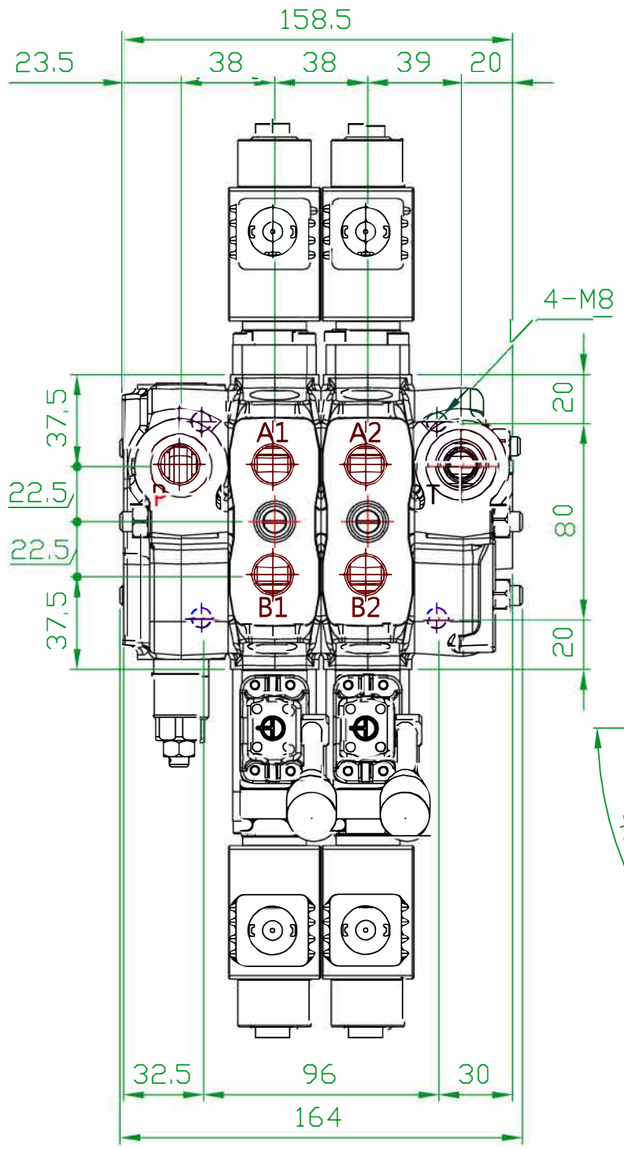

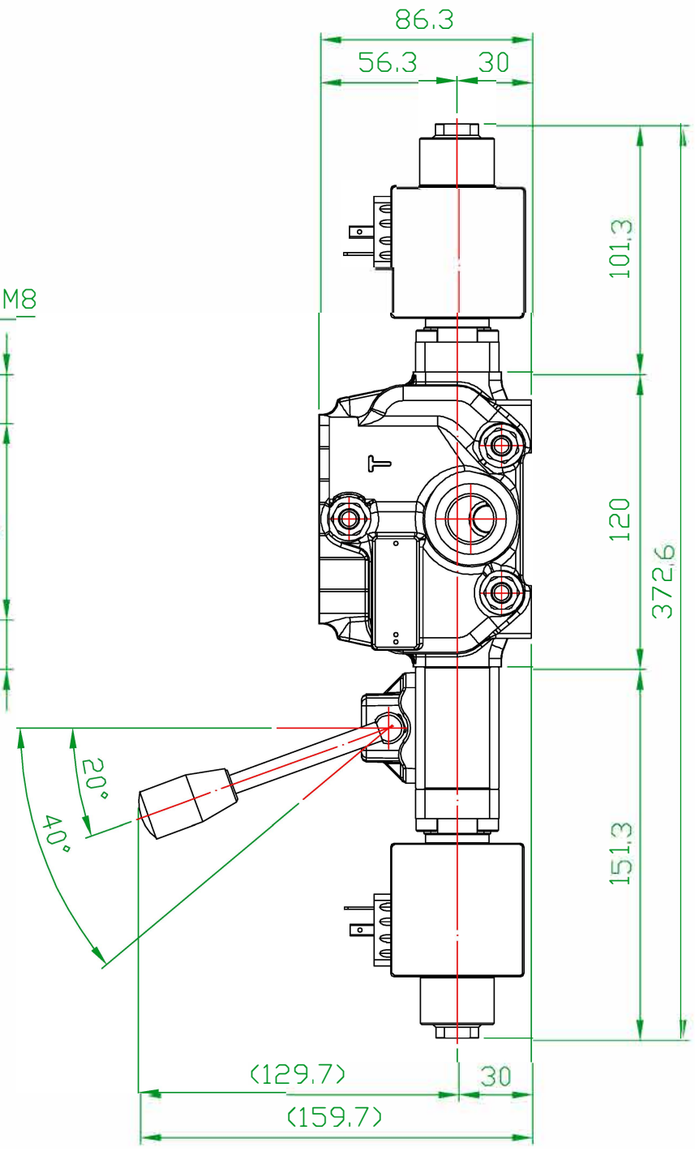

Nominal flow rating 流量		50 L/min	13 US gpm
Operating pressure (Max.) 使用壓力(最大)		315 bar	4600 psi
Back pressure (Max.) 背壓(最大)	on outlet port T 回油口T	25 bar	360 psi
Fluid temperature 流體溫度	with NBR seals O環(NBR)	-20°C ~ 80°C	-4°F ~ 176°F
	with FPM seals O環(FPM)	-20°C ~ 100°C	-4°F ~ 212°F
Viscosity 黏度係數	Operating range 建議使用範圍	$15mm^2/s$ ~ $75mm^2/s$	15 ~ 75 cst
	Max. 最大	$400mm^2/s$	400 cst
	Min. 最小	$12mm^2/s$	12 cst
Ambient temperature 環境溫度範圍		-40°C ~ 60°C	-40°F ~ 140°F

Standard threads 螺紋規範

PORTS 口位	BSP	UN-UNF	METRIC
Inlet P 入油口	G 3/8	7/8-14 (SAE 10)	M18x1.5
A and B ports 工作口	G 3/8	3/4-16 (SAE 8)	M18x1.5
Outlet T and power beyond C 回油口	G 1/2	7/8-14 (SAE 10)	M22x1.5

®

Unit mm

Scale 1:2.5