DICSA

#HydraulicsExperts

RACORES INOXIDABLE

Stainless Steel Fittings · *Raccords en Acier Inox* · Raccordi in Acciaio Inox

AISI 316L

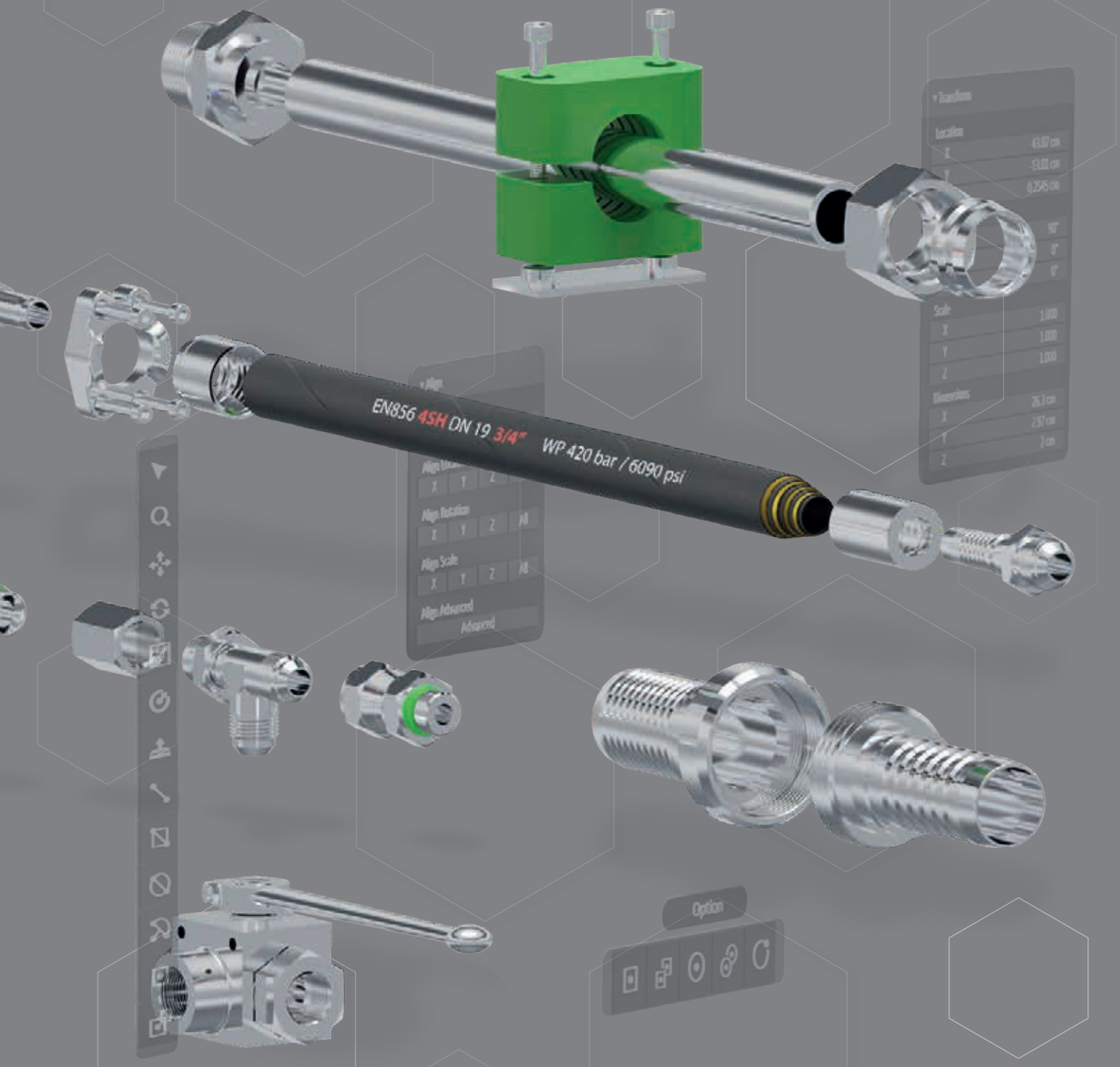

www.dicsaes.com

2025

DICSA

MUCHO MÁS QUE UNA PÁGINA WEB
MORE THAN JUST A WEBSITE

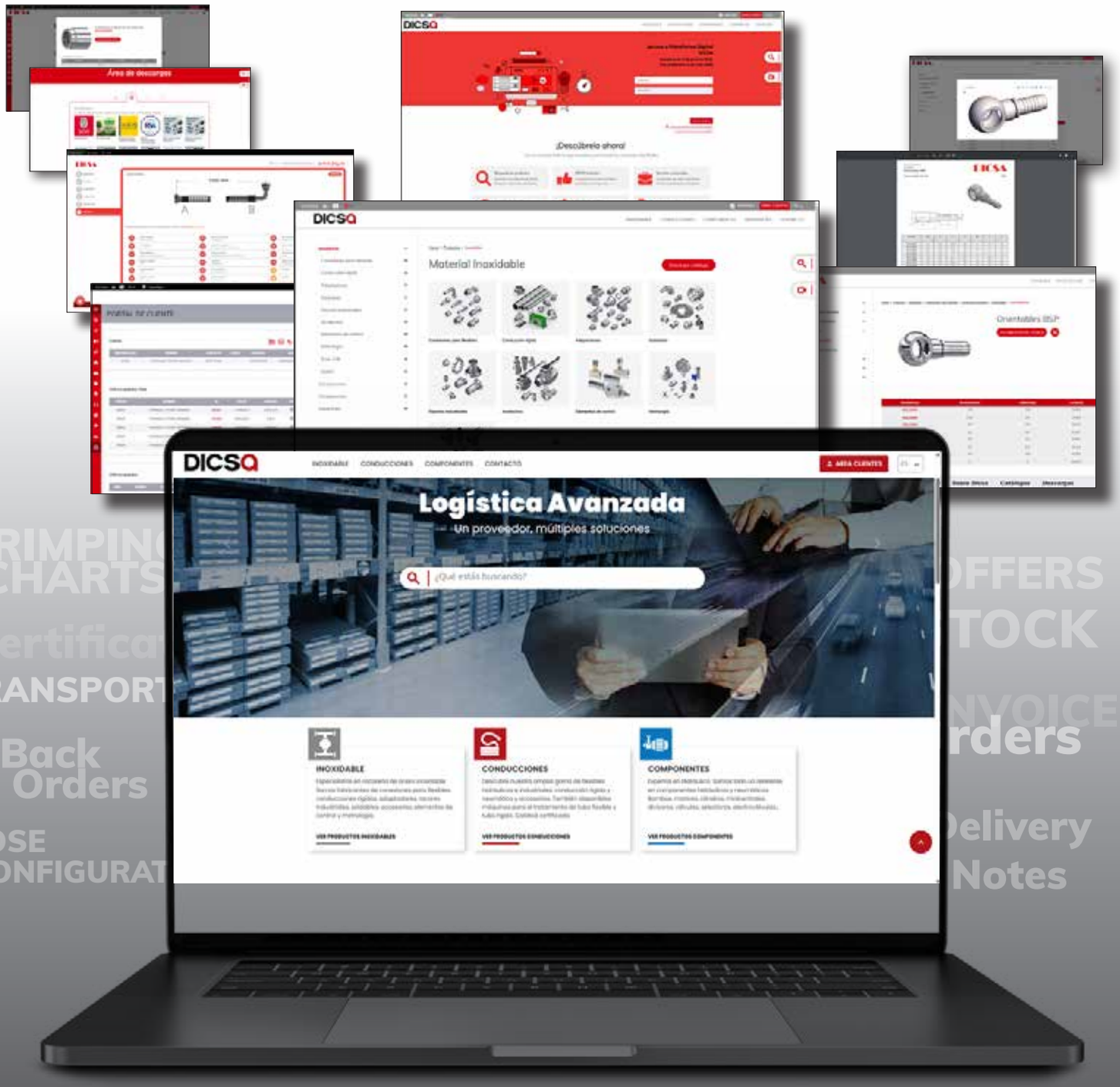

www.dicsaes.com

CONEXIONES PARA FLEXIBLES
Crimp fittings for hoses
Embouts à sertir pour flexibles
Raccordi a pressare per tubi flessibili

TUBO RÍGIDO / RACORES DIN 2353 / RACORES JIC 37°
Rigid Pipe/ Pipe fittings DIN 2353/ Flare fittings JIC 37°
Tube rigide / Raccords DIN 2353/ Adapteurs JIC 37°
Tubo rigido/ Raccordi DIN 2353/ Raccordi JIC 37°

TUBO RÍGIDO SCH / RACORES SCH / BRIDAS SAE / ABRAZADERAS
SCH Rigid pipe/ SCH fittings / SAE Flanges / Clamps
Tube rigide SCH / Embouts SCH / Brides SAE/ Colliers
Tubo rigido SCH / Raccordi SCH / Flange SAE/ Collari fissatubo

ADAPTADORES
Adaptors
Adapteurs
Adattatori

RACORES SOLDABLES
Welding fittings
Raccords à souder
Raccordi a saldare

RACORES INDUSTRIALES
Industrial fittings
Raccords industriels
Raccordi industriali

ACCESORIOS
Accessories
Accessoires
Accessori

COMPONENTES HIDRÁULICOS AISI 316
Hydraulic Components AISI 316
Composants Hydrauliques AISI 316
Componenti Idraulici AISI 316

METROLOGÍA
Flow measuring
Test du circuit hydraulique
Test per circuiti idraulici

RACOR DOBLE ANILLO
Twin Ferrule Fittings
Raccord double bague
Raccordi per doppio anello

Conexiones Standard 22
Standard series
Embouts série standard
Serie Standard

Conexiones Serie BW+ R13/R15 No Pelar 42
Fittings BW+ Series R13/R15 No Skive
Embouts R13/R15 Série BW+ Sans denuder
Raccordi R13/R15 Serie BW+ senza spellatura

Conexiones Interlock 46
Interlock series
Embouts Interlock
Serie Interlock

Casquillos para conexiones una sola pieza 51
Ferrules for one piece fittings
Jupes pour embouts pré-sertis
Boccole per raccordi compatti

Conexiones una sola pieza Serie 43 R1AT/R2AT/1SN/2SN/R16/2SC/R17 52
One piece fittings 43 Series
R1AT/R2AT/1SN/2SN/R16/2SC/R17
Embouts pré-sertis
R1AT/R2AT/1SN/2SN/R16/2SC/R17 Série 43
Raccordi compatti R1AT/R2AT/1SN/2SN/R16/2SC/
R17 Serie 43

Conexiones una sola pieza Serie BWS 3SP/4SP/R12/4SH No Pelar 60
One piece fittings BWS Series
3SP/4SP/R12/4SH No Skive
Embouts pré-sertis Série BWS
3SP/4SP/R12/4SH Sans dénuder
Raccordi Compatti Serie BWS 3SP/4SP/R12/4SH
senza spellatura

Conexiones una pieza Serie BW+ R13/R15 No Pelar 67
One piece fittings BW+ Series R13/R15 No Skive
Embouts R13/R15 Série BW+ Sans denuder
Raccordi R13/R15 Serie BW+ senza spellatura

Conexiones una sola pieza R7/ R8/ Elastómero malla metálica 70
One piece fittings R7/R8 & Elastomer Braid of steel wire
Embouts pré-sertis R7/R8 et Elastomère tresse métallique
Raccordi compatti serie R7/R8 e elastomero treccia metallica

Conexiones una sola pieza PTFE Liso / R14 75
One piece fittings for Smooth PTFE/ R14
Embouts pré-sertis pour PTFE lisse/ R14
Raccordi compatti per PTFE liscio/ R14

Conexiones una sola pieza PTFE Corrugado 80
One piece fittings for convoluted PTFE
Embouts pré-sertis pour PTFE convoluté
Raccordi compatti per PTFE corrugato

Conexiones Reusables 85
Reusable series
Embouts série récupérable
Serie Recuperabile

Conexiones Push-On 88
Push-On Fittings
Embouts Push-On
Raccordi Serie Push-On

Conexiones Alta Presión (700 bar) 89
High pressure 700 bar fittings
Embouts haute pression 700 bar
Raccordi Altissima pressione (700 bar)

01

CONEXIONES PARA FLEXIBLES

Crimping fittings for hoses

Embouts à sertir pour flexibles

Raccordi a pressare per tubi flessibili

STANDARD SERIES

Serie Standard

SAE 100 R6	EN 854 2TE

DI23

EN 854 3TE	SAE 100 R17	EN 857 2SC SUPERSERVICE 2SC 155°	EN 853 1SN SAE 100 R1AT 1SNK

DI2212 | SC2112... | SC2112 / DI2212

EN 853 2SN SAE 100 R2AT 2SNK	EXCEED EN 857 2SCK	EN 857 2SC SUPERSERVICE 2SC 155°

DI2212

EN 853 2ST SAE100 R2A	EN 856 4SP SAE 100 R9R	EN 856 R12 SAE 100

DI1224

3SP	EN 856 4SP SAE 100 R9R	EN 856 4SH	EN856 R12 SAE 100	EN 856 R13 SAE 100	SAE 100 R15

NO PELAR
NO SKIVE

3/4"-1"

DI2224

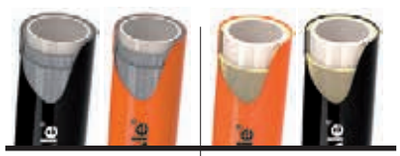

SAE 100 R7 EN 855	SAE 100 R8 EN 855

DI23

Metallic 1 braid	Metallic 2 braid

DI23 | DI1224

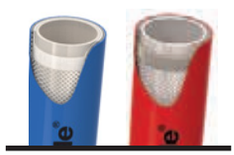

Ecology 200	Ecology 250

Z2120...

Smooth PTFE R14 1 braid	Convoluted PTFE Standard

28040 | 28041

PTFLEX

21041

Smooth PTFE R14 1 braid	Smooth PTFE 2 braid

21040 | 21045

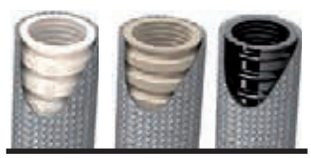

Standard | Fiberglass | Antistatic

Convoluted PTFE

21041

Datos de tablas de prensado siempre actualizados en nuestra web: www.dicsaes.com / Crimping information always updated on our website: www.dicsaes.com
Consulta nuestras mangueras con cubiertas Gold RockCover / Check our Hoses with Gold RockCover

SERIE BW+ NO PELAR

BW+ Series no skive

EN 856
R13
SAE 100

SAE 100
R15

ZAC69010...

1" 1/4-1" 1/2-2"

SERIE INTERLOCK

Interlock series

EN 856
4SH

EN 856
R13
SAE 100

SAE 100
R15

ZA61010...

ZA61010...
Z61010...

SERIE COMPACTA

One Piece Series
Série Pré-sértis
Serie Compatti

Conexiones compactas 1SC / 1SN / 2SC / R6 / 2TE

One piece fittings 1SC / 1SN / 2SC / R6 / 2TE
Embouts pré-sertis 1SC / 1SN / 2SC / R6 / 2TE
Raccordi compatti 1SC / 1SN / 2SC / R6 / 2TE

EN 857 1SC	EN 853 1 SN SAE 100 R1AT	EN 857 2SC	EN 854 SAE 100 R6	EN 854 2TE

Conexiones compactas Serie 43 R1AT / R2AT / 1SN / 2SN / R16 / 2SC / 3TE/R17

One piece fittings 43 Series R1AT / R2AT / 1SN / 2SN / R16 / 2SC / 3TE/R17
Embouts pré-sertis R1AT / R2AT / 1SN / 2SN / R16 / 2SC Série 43 / 2TE/ R17
Raccordi compatti R1AT / R2AT / 1SN / 2SN / R16 / 2SC Serie 43 /3TE /R17

EN 853 1SN SAE 100R1AT	EN 853 2 SN SAE 100 R2AT	EN 857 2SC SAE 100 R16	SUPERSERVICE 155° 2SC	3TE

Conexiones compactas Serie BWS NO PELAR 3SP / 4SP /4SH / R12

One piece fittings Standar Series NON SKIVE 3SP / 4SP / 4SH / R12
Embouts pré-sertis SANS DÉNUDÉ 3SP / 4SP / 4SH / R12
Raccordi compatti SENZA PELATURA 3SP / 4SP / 4SH / R12

NO PELAR
NO SKIVE

3SP	EN 856 4SP SAE 100 R9R	EN 856 4SH	EN856 R12 SAE 100	EN 856 R13 SAE 100	SAE 100 R15
				3/4"-1"	

Conexiones compactas Serie BW+ NO PELAR R13 / R15

One piece fittings BW+ Series NON SKIVE R13 / R15
Embouts pré-sertis BW+ SANS DÉNUDÉ R13 / R15
Raccordi compatti BW+ SENZA PELATURA R13 / R15

NO PELAR
NO SKIVE

EN 856 SAE 100 R13	SAE 100 R15

Conexiones compactas R7 / R8 y elastómero malla metálica

Piece fittings R7 / R8 & braid of steel wire
Embouts pré-sertis R7 / R8 et tresse métallique
Raccordi compatti serie R7 / R8 e elastomero treccia metallica

SAE 100 R7	SAE 100 R8	Metallic braid elastomer

Conexiones compactas PTFE liso R14

One piece fittings for smooth PTFE R14
Embouts pré-sertis pour PTFE lisse R14
Raccordi compatti serie PTFE liscio R14

Smooth PTFE 1 braid

Conexiones compactas PTFE corrugado

One piece fittings for convoluted PTFE
Embouts pré-sertis pour PTFE convolute
Raccordi compatti serie PTFE corrugato

Convoluted PTFE

Conexiones Standard

Standard series
Embouts série standard
Serie Standard

Casquillos para prensar ▪ Crimping ferrules ▪ Jupes à sertir ▪ Boccole a pressare | 22

Conexiones BSP ▪ BSP Fittings ▪ Embouts BSP ▪ Raccordi BSP | 25

Conexiones NPT-NPSM ▪ NPT-NPSM Fittings ▪ Embouts NPT-NPSM ▪ Raccordi NPT-NPSM | 29

Conexiones JIC 37° ▪ JIC 37° Fittings ▪ Embouts JIC 37° ▪ Raccordi JIC 37° | 30

Conexiones Métricas DIN 2353 ▪ Metric fittings ▪ Embouts Métriques ▪ Raccordi Metrici | 32

Espigas lisas ▪ Standpipes ▪ Embouts lisses ▪ Estremitá tubolari | 36

Conexiones Varias ▪ Other Fittings ▪ Autres ▪ Raccordi vari | 37

Terminales hidrolavadoras ▪ Hydrowashing machine couplings ▪ Embouts pour hydronettoyage ▪ Raccordi per idro-pulitrici | 37

Conexiones Standard

Standard series
Embouts série standard
Serie Standard

Orientables ▪ Banjos ▪ Embouts Banjo ▪ Raccordi ad occhio | 38

84111 Z1090 84116 Z1092

Bridas SAE ▪ SAE Flanges/Code 61 & 62 ▪ Brides SAE ▪ Flange SAE | 39

84182 84183 84184 84282 84283 84284

Bridas para flexibles ▪ SAE Flanges for hoses ▪ Brides SAE pour flexibles ▪ Flange per tubi flessibili | 40

ZBBP ZBBE ZTB ZBCE JBR ORING

Conexiones ORFS ▪ ORFS Fittings ▪ Embouts ORFS ▪ Raccordi ORFS | 41

84901 84912 84907 84908

Conexiones O´Ring Boss ▪ O´Ring Boss Fittings ▪ Embouts O´Ring Boss ▪ Raccordi O´Ring Boss | 41

84712

Conexiones Serie BW+ R13/R15 No Pelar

Fittings BW+ Series R13/R15 No Skive
Embouts R13/R15 Série BW+ Sans denuder
Raccordi R13/R15 Serie BW+ senza spellatura

Casquillos para conexiones serie BW/ BW+ ▪ Ferrules for fittings BW/ BW+ series ▪ Jupes pour embouts série BW/ BW+ ▪ Boccole a pressare per raccordi serie BW/ BW+ | 42

ZAC69010

Conexiones BSP ▪ BSP fittings ▪ Embouts BSP ▪ Raccordi BSP | 42

Z66410

Z66117

Z66118

Z66112

Z66510

Z66517

Z66518

Conexiones NPT/NPSM ▪ NPT/NPSM fittings ▪ Embouts NPT/NPSM ▪ Raccordi NPT/NPSM | 43

Z66461

Z66161

Conexiones JIC 37° ▪ JIC 37° fittings ▪ Embouts JIC ▪ Raccordi JIC 37° | 43

Z66242

Z66138

Z66139

Z66141

Conexiones ORFS ▪ ORFS fittings ▪ Embouts ORFS ▪ Raccordi ORFS | 44

Z66901

Z66907

Z66908

Z66912

Conexiones Métricas DIN 2353 ▪ Metric fittings ▪ Embouts Métriques ▪ Raccordi Metrici | 44

Z66204

Z66205

Z66206

Z66203

Bridas SAE ▪ SAE Flanges/ Code 61 & 62 ▪ Brides SAE ▪ Flange SAE | 45

Z66282

Z66283

Z66284

Conexiones Interlock

Interlock series
Embouts Interlock
Serie Interlock

Casquillos Interlock ▪ Interlock Crimping ferrules ▪ Jupes à sertir Interlock ▪ Boccole a pressare | 46

ZA61010

Z61010

Conexiones BSP y NPT ▪ Interlock BSP & NPT fittings ▪ Embouts à sertir Interlock BSP et NPT ▪ Raccordi BSP, NPT | 46

Z64107

Z64108

Z64112

Z64161

Z64500

Z64507

Z64508

Conexiones JIC 37° ▪ Interlock JIC 37° fittings ▪ Embouts à sertir Interlock JIC ▪ Raccordi JIC 37° | 48

Z64242

Z64142

Z64140

Z64138

Z64139

Conexiones Métricas DIN 2353 ▪ Interlock Metric fittings ▪ Embouts Métrique Interlock ▪ Raccordi Metrici | 49

Z64204

Z64205

Z64206

Z64203

Conexiones ORFS ▪ Interlock ORFS fittings ▪ Embouts à sertir Interlock ORFS ▪ Raccordi ORFS | 49

Z64901

Z64912

Z64907

Z64908

Bridas SAE ▪ Interlock SAE Flanges/ Code 61 & 62 ▪ Brides SAE Interlock ▪ Flange SAE | 50

Z64182

Z64183

Z64184

Z64282

Z64283

Z64284

Casquillos para conexiones una sola pieza

Ferrules for one piece fittings
Jupes pour embouts pré-sertis
Boccole per raccordi compatti

Casquillos para Conexiones una sola pieza ▪ Ferrules for one piece fittings ▪ Jupes pour embouts pré-sertis ▪ Boccole per raccordi compatti

ZPFC2212

ZPF2224

88012

88040

88041

ZSCC2112

ZAC69010

Conexiones una sola pieza Serie 43 R1AT/R2AT/1SN/2SN/R16/2SC/R17

One piece fittings 43 Series R1AT/R2AT/1SN/2SN/R16/2SC/R17
Embouts pré-sertis R1AT/R2AT/1SN/2SN/R16/2SC/R17 Série 43
Raccordi compatti R1AT/R2AT/1SN/2SN/R16/2SC/R17 Serie 43

Conexiones una sola pieza JIC 37° ▪ One piece JIC 37° fittings ▪ Embouts pré-sertis JIC 37° ▪ Raccordi compatti JIC 37° | 52

88242 88142 88140 88138 88139

Conexiones una sola pieza ORFS ▪ One piece ORFS fittings ▪ Embouts pré-sertis ORFS ▪ Raccordi compatti ORFS | 54

88900 88907 88912 88908

Conexiones una sola pieza NPT-NPSM ▪ One piece NPT-NPSM fittings ▪ Embouts pré-sertis NPT-NPSM ▪ Raccordi compatti NPT-NPSM | 55

88361 88261 88262 88263 88161 88165

Conexiones una sola pieza Bridas SAE ▪ One piece SAE Flanges fittings ▪ Embouts pré-sertis Brides SAE ▪ Raccordi compatti Flange SAE | 56

88182 88183 88184 88282 88283 88284

Conexiones una sola pieza Métricas ▪ One piece Metric fittings ▪ Embouts pré-sertis Métriques ▪ Raccordi compatti Metrici | 57

88804 88203 88305 88306

Conexiones una sola pieza BSP ▪ One piece BSP fittings ▪ Embouts pré-sertis BSP ▪ Raccordi compatti BSP | 59

88400 88100 88200 88107 88108 88112

Conexiones una sola pieza Serie BWS 3SP/4SP/R12/4SH No Pelar

One piece fittings BWS Series 3SP/4SP/R12/4SH No Skive
Embouts pré-sertis Série BWS 3SP/4SP/R12/4SH Sans dénuder
Raccordi Compatti Serie BWS 3SP/4SP/R12/4SH senza spellatura

Conexiones una sola pieza JIC 37° ▪ One piece JIC 37° fittings ▪ Embouts pré-sertis JIC 37° ▪ Raccordi compatti JIC 37° | 60

Z58242 Z58138 Z58140 Z58142 Z58139

Conexiones una sola pieza ORFS ▪ One piece ORFS fittings ▪ Embouts pré-sertis ORFS ▪ Raccordi compatti ORFS | 61

Z58901 Z58907 Z58912 Z58908

Conexiones una sola pieza NPT-NPSM ▪ One piece NPT-NPSM fittings ▪ Embouts pré-sertis NPT-NPSM ▪ Raccordi compatti NPT-NPSM | 62

Z58361 Z58262 Z58161 Z58261 Z58263 Z58165

Conexiones una sola pieza Bridas SAE ▪ One piece SAE Flanges fittings/ Code 61 & 62 ▪ Embouts pré-sertis Brides SAE ▪ Raccordi compatti Flange SAE | 63

Z58182 Z58183 Z58184 Z58282 Z58283 Z58284

Conexiones una sola pieza Métricas ▪ One piece Metric fittings ▪ Embouts pré-sertis Métriques ▪ Raccordi compatti Metrici | 64

Z58804 Z58305 Z58203 Z58306

Conexiones una sola pieza BSP ▪ One piece BSP fittings ▪ Embouts pré-sertis BSP ▪ Raccordi compatti BSP | 65

Z58400 Z58117 Z58112 Z58200 Z58118 Z58110

Conexiones una pieza Serie BW+ R13/R15 No Pelar

One piece fittings BW+ Series R13/R15 No Skive
Embouts R13/R15 Série BW+ Sans denuder
Raccordi R13/R15 Serie BW+ senza spellatura

Conexiones JIC 37° ▪ JIC 37° fittings ▪ Embouts JIC 37° ▪ Raccordi JIC 37° | 67

Z69242 Z69138 Z69141 Z69139

Conexiones ORFS ▪ ORFS fittings ▪ Embouts ORFS ▪ Raccordi ORFS | 67

Z69901 Z69907 Z69908 Z69912

Conexiones NPT/NPSM ▪ NPT/NPSM fittings ▪ Embouts NPT/NPSM ▪ Raccordi NPT/NPSM | 68

Z69361 Z69161

Bridas SAE ▪ SAE Flanges ▪ Brides SAE ▪ Flange SAE | 68

Z69282 Z69283 Z69284

Conexiones BSP ▪ BSP fittings ▪ Embouts BSP ▪ Raccordi BSP | 69

Z69510 Z69112 Z69517 Z69518

Conexiones una sola pieza R7/ R8/ Elastómero malla metálica

One piece fittings R7/R8 & Elastomer Braid of steel wire
Embouts pré-sertis R7/R8 et Elastomère tresse métallique
Raccordi compatti serie R7/R8 e elastomero treccia metallica

Conexiones una sola pieza R7/R8 JIC 37° ▪ 37° JIC One piece fittings R7/R8 ▪ Embouts pré-sertis R7/R8 JIC 37° ▪ Raccordi compatti serie R7/R8 JIC sede 37° | 70

87242 87138 87140 87142 87139

Conexiones una sola pieza R7/R8 ORFS ▪ ORFS One piece fittings R7/R8 ▪ Embouts pré-sertis R7/R8 ORFS ▪ Raccordi compatti serie R7/R8 ORFS | 71

87900 87907 87912 87908

Conexiones una sola pieza R7/R8 NPT-NPSM ▪ NPT-NPSM One piece fittings R7/R8 ▪ Embouts pré-sertis R7/R8 NPT-NPSM ▪ Raccordi compatti serie R7/R8 NPT-NPSM | 72

87361 87262 87161 87261 87263

Conexiones una sola pieza R7/R8 Métricas ▪ Metric One piece fittings R7/R8 ▪ Embouts pré-sertis R7/R8 Métriques ▪ Raccordi compatti serie R7/R8 Metrici | 73

87804 87305 87203 87306

Conexiones una sola pieza R7/R8 BSP ▪ BSP One piece fittings R7/R8 ▪ Embouts pré-sertis R7/R8 BSP ▪ Raccordi compatti serie R7/R8 BSP | 74

87400 87107 87112 87100 87108

Conexiones una sola pieza PTFE Liso / R14

One piece fittings for Smooth PTFE/ R14
Embouts pré-sertis pour PTFE lisse/ R14
Raccordi compatti per PTFE liscio/ R14

Conexiones una sola pieza PTFE liso / R14 JIC 37° ▪ 37° JIC One piece fittings smooth PTFE / R14 ▪ Embouts pré-sertis PTFE lisse / R14 JIC 37° ▪ Raccordi compatti serie PTFE liscio / R14 JIC 37° | 75

86242 86138 86140 86142 86139

Conexiones una sola pieza PTFE liso / R14 ORFS ▪ ORFS One piece fittings smooth PTFE / R14 ▪ Embouts pré-sertis PTFE lisse / R14 ORFS ▪ Raccordi compatti serie PTFE liscio / R14 ORFS | 76

86900 86907 86912 86908

Conexiones una sola pieza PTFE liso/ R14 NPT-NPSM ▪ NPT-NPSM One piece fittings smooth PTFE / R14 ▪ Embouts pré-sertis PTFE lisse / R14 NPT-NPSM ▪ Raccordi compatti serie PTFE liscio / R14 NPT-NPSM | 77

86361 86262 86161 86261 86263

Conexiones una sola pieza PTFE liso / R14 Métricas ▪ Metric One piece fittings smooth PTFE / R14 ▪ Embouts pré-sertis PTFE lisse / R14 Métriques ▪ Raccordi compatti serie PTFE liscio / R14 Metrici | 78

86804 86305 86203 86306

Conexiones una sola pieza PTFE liso / R14 BSP ▪ BSP One piece fittings smooth PTFE / R14 ▪ Embouts pré-sertis PTFE lisse/ R14 BSP ▪ Raccordi compatti serie PTFE liscio / R14 BSP | 79

86400 86107 86112 86100 86108

Conexiones una sola pieza PTFE liso / R14 Espiga Lisa ▪ One piece fittings standpipe / R14 ▪ Embouts pré-sertis PTFE lisse / R14 embout lisse ▪ Raccordi compatti serie PTFE liscio / R14 estremitá tubolare | 79

86159

Conexiones una sola pieza PTFE Corrugado

One piece fittings for convoluted PTFE
Embouts pré-sertis pour PTFE convoluté
Raccordi compatti per PTFE corrugato

Conexiones una sola pieza PTFE Corrugado JIC 37° ▪ One piece fittings for convoluted PTFE JIC 37° ▪ Embouts pré-sertis pour PTFE convoluté JIC 37° ▪ Raccordi compatti serie PTFE convoluto JIC 37° 80

85242 85138 85140 85142 85139

Conexiones una sola pieza PTFE Corrugado ORFS ▪ One piece fittings for convoluted PTFE ORFS ▪ Embouts pré-sertis pour PTFE convoluté ORFS ▪ Raccordi compatti serie PTFE convoluto ORFS 81

85900 85907 85912 85908

Conexiones una sola pieza PTFE Corrugado NPT-NPSM ▪ One piece fittings for convoluted PTFE NPT-NPSM ▪ Embouts pré-sertis pour PTFE convoluté NPT-NPSM ▪ Raccordi compatti serie PTFE convoluto NPT-NPSM 82

85361 85262 85161 85261 85263

Conexiones una sola pieza PTFE Corrugado Métricas ▪ One piece fittings for convoluted PTFE Metrical ▪ Embouts pré-sertis pour PTFE convoluté Métriques ▪ Raccordi compatti serie PTFE convoluto METRICI 83

85804 85305 85203 85306

Conexiones una sola pieza PTFE Corrugado BSP ▪ One piece fittings for convoluted PTFE BSP ▪ Embouts pré-sertis pour PTFE convoluté BSP ▪ Raccordi compatti serie PTFE convoluto BSP 84

85400 85107 85112 85100 85108

Conexiones Reusables

Reusable series
Embouts série récupérable
Serie Recuperabile

Conexiones una sola pieza Reusables ▪ Reusable One Piece fittings ▪ Embouts série récuperable 1 piéce ▪ Raccordi compatti recuperabile | 85

Z3J...R2T Z2NPT...R2T

Casquillos reusables ▪ Crimping ferrules ▪ Jupes à sertir ▪ Boccole recuperabili | 85

Z1G...R1T Z1G...R2T

Conexiones BSP ▪ Reusable BSP ▪ Récuperables BSP ▪ Raccordi recuperabili BSP | 85

Z3G Z90G Z2G

Conexiones JIC 37° ▪ Reusable JIC 37° ▪ Récuperables JIC 37° ▪ Raccordi recuperabili JIC | 86

Z3J Z2J Z3J90 Z3J45

Conexiones NPT ▪ Reusable NPT ▪ Récuperables NPT ▪ Raccordi recuperabili NPT | 86

Z2NPT

Conexiones Métricas ▪ Reusable Metric ▪ Récuperables Métriques ▪ Raccordi recuperabili Metrici | 86

ZE

Conexiones R5 ▪ Reusable R5 ▪ Récuperables R5 ▪ Raccordi recuperabili R5 | 87

Z3J...R5 Z3J90...R5 Z2P...R5 Z3J45...R5

Conexiones Push-On

Push-On Fittings
Embouts Push-On
Raccordi Serie Push-On

Conexiones Push-On BSP ▪ Push-on BSP fittings ▪ Embouts Push-on BSP ▪ Raccordi Serie Push-on BSP | 88

89100

89112

Conexiones Push-On JIC 37° ▪ Push-on 37° JIC fittings ▪ Embouts Push-on JIC 37° ▪ Raccordi Serie Push-on JIC 37° | 88

89142

89140

Conexiones Push-On NPT ▪ Push-on NPT fittings ▪ Embouts Push-on NPT ▪ Raccordi Serie Push-on NPT | 88

89161

Conexiones Push-On Métricas ▪ Push-on Metric fittings ▪ Embouts Push-on Métriques ▪ Raccordi Serie Push-on Metrici | 88

89804

89203

Conexiones Alta Presión (700 bar)

High pressure 700 bar fittings
Embouts haute pression 700 bar
Raccordi Altissima pressione (700 bar)

Casquillos para prensar ▪ Ferrules ▪ Jupes à sertir ▪ Boccole | 89

Z71012

Conexiones BSP ▪ BSP Fittings ▪ Embouts BSP ▪ Raccordi BSP | 89

Z74100

Z74112

Conexiones NPSM - NPT ▪ NPSM - NPT Fittings ▪ Embouts NPSM - NPT ▪ Raccordi NPSM - NPT | 89

Z74261

Z74161

Conexiones JIC 37° ▪ JIC 37° Fittings ▪ Embouts JIC 37° ▪ Raccordi JIC 37° | 89

Z74142

Z74140

Conexiones Métricas ▪ Metric Fittings ▪ Embouts métriques ▪ Raccordi Metrici | 89

Z74804

Z74203

MARINE EQUIPMENT DIRECTIVE
DNV
2014/90/EU

ABS
TYPE APPROVED PRODUCT

Mangueras/Hoses:

Mangueras/Hoses:

SEL HOSES

SEMPERIT

CONEXIONES FABRICADAS POR *FITTINGS MANUFACTURED BY* DICSA

CERTIFIED
ISO 9001
ISO 14001
BUREAU VERITAS

SUSTAINABLE DEVELOPMENT GOALS

ACIE
AGENCIA DE CERTIFICACIÓN EN INNOVACIÓN ESPAÑOLA

Gates

MARINE EQUIPMENT DIRECTIVE
DNV
2014/90/EU

Conexiones Standard

Standard series
Embouts série standard
Serie Standard

Casquillos R1AT/R2AT/ 1SN/2SN/ R16/2SC/3TE

Ferrules R1AT/R2AT/1SN/2SN/R16/2SC/3TE

Jupes R1AT/R2AT/1SN/2SN/R16/2SC/3TE

Boccole pressare per R1AT/R2AT/1SN/2SN/ R16/2SC/3TE

DN	Referencia Part n°	€
3/16"-R1AT	810200300*	-
3/16"-R2AT	810300300*	-
3/16" NEW	ZPF221200300	-
1/4"	ZPF221200400	-
5/16"	ZPF221200500	-
3/8"	ZPF221200600	-
1/2"	ZPF221200800	-
5/8"	ZPF221201000	-
3/4"	ZPF221201200	-
1"	ZPF221201600	-
1"1/4	ZPF221202000	-
1"1/2	ZPF221202400	-
2"	ZPF221203200	-
2"1/2	ZPF221204000	-
3"	ZPF221204800	-

* **Hasta fin de existencias** / *Until end of stock* / Jusqu´à la fin du stock / *Fino ad esaurimento*

Casquillos R1A-1ST

Ferrules R1A-1ST

Jupes R1A-1ST

Boccole pressare per R1A-1ST

DN	Referencia Part n°	€
3/16"	820030300	-
1/4"	820030400	-
5/16"	820030500	-
3/8"	820030600	-
1/2"	820030800	-
5/8"	820031000	-
3/4"	820031200	-
1"	820031600	-
1"1/4	820032000	-
1"1/2	820032400	-
2"	820033200	-

Casquillos R4

Ferrules R4

Jupes R4

Boccole pressare per R4

DN	Referencia Part n°	€
3/4"	ZPF221201200R4	-

Para otras medidas, consultar tablas de prensado en nuestra web. / *For other sizes, please check out the crimping table on our website.* / Pour les autres dimensions, voir tableau de sertissage disponible sur notre site web. / *Per altre dimensioni, vedere tabella di pressatura nel ns. sito web*

Casquillos 1SC/1SN/2SC/R6/2TE/R17

Ferrules 1SC/1SN/2SC/R6/2TE/R17

Jupes 1SC/1SN/2SC/R6/2TE/R17

Boccole pressare per 1SC/1SN/2SC/R6/2TE/R17

DN	Referencia Part n°	€
1/4"	ZSC21120400	-
5/16"	ZSC21120500	-
3/8"	ZSC21120600	-
1/2"	ZSC21120800	-
5/8"	ZSC21121000	-
3/4"	ZSC21121200	-
1"	ZSC21121600	-

Casquillos R2A-2ST/4SP-R9R / R12

Ferrules R2A-2ST/4SP-R9R / R12

Jupes R2A-2ST/4SP-R9R / R12

Boccole pressare per R2A-2ST/4SP-R9R / R12

DN	Referencia Part n°	€
3/16" - R2A	820060300	-
1/4"	ZPF122400400	-
5/16"	ZPF122400500	-
3/8"	ZPF122400600	-
1/2"	ZPF122400800	-
5/8"	ZPF122401000	-
3/4"	ZPF122401200	-
1"	ZPF122401600	-
1"1/4	ZPF122402000	-
1"1/2	ZPF122402400	-
2"	ZPF122403200	-

Casquillos 3SP/4SP/R12/4SH no pelar

Ferrules 3SP/4SP/R12/4SH non skive

Jupes 3SP/4SP/R12/4SH sans dénudage

Boccole pressare per 3SP/4SP/R12/4SH senza spellatura

DN	Referencia Part n°	€
3/8"	ZPF222400600	-
1/2"	ZPF222400800	-
5/8"	ZPF222401000	-
3/4"	ZPF222401200	-
1"	ZPF222401600	-
1" 1/4	ZPF222402000	-
1" 1/2	ZPF222402400	-
2"	ZPF222403200	-

Conexiones Standard

Standard series
Embouts série standard
Serie Standard

Casquillos R7/R8 y elastómero malla metálica / R6

Ferrules R7/R8 and metallic braid / R6

Jupes R7/R8 et tresse métallique / R6

Boccole pressare per R7/R8 e elastomero treccia metallica / R6

DN	Referencia Part n°	€
1/8"	810140200	-
3/16"	810140300	-
1/4"	810140400	-
5/16"	810140500	-
3/8"	810140600	-
1/2"	810140800	-
5/8"	810141000	-
3/4"	810141200	-
1"	810141600	-

Casquillos para mangueras Ecology y limpieza de alcantarillas

Ferrules for Ecology hose and Sewer Jetting hose

Jupes pour tuyau Ecology et tuyau Hydrocurage

Boccole pressare per tubi Ecology e pulizia fossa biologica

DN	Referencia Part n°	€
3/4"	Z212001200	-
1"	Z212001600	-
1"1/4	Z212002000	-

Casquillos PTFE Liso

Ferrules for smooth PTFE

Jupes PTFE lisse

Boccole pressare per PTFE liscio

DN	Referencia Part n°	€
1/8"	810400100	-
3/16"	810400300	-
1/4"	810400400	-
5/16"	810400500	-
3/8"	810400600	-
1/2"	810400800	-
5/8"	810401000	-
3/4"	810401200	-
1"	810401600	-

Casquillos PTFE Corrugado

Ferrules for convoluted PTFE

Jupes PTFE convoluté

Boccole pressare per PTFE corrugato

DN	Referencia Part n°	€
1/4"	810410400	-
5/16"	810410500	-
3/8"	810410600	-
1/2"	810410800	-
5/8"	810411000	-
3/4"	810411201	-
1"	810411600	-
1"1/4	810412000	-
1"1/2	810412400	-
2"	810413200	-
2"1/2	810414000	-

Casquillos PTFE Liso doble malla

Ferrules for double braid smooth PTFE

Jupes PTFE lisse double tresse

Boccole pressare per PTFE liscio doppia treccia

DN	Referencia Part n°	€
1/4"	810450400	-
3/8"	810450600	-

Para otros tamaños, consultar tabla de prensado en nuestra web. */ For other sizes, please check out the crimping table on our website. /* Pour les autres dimensions, voir tableau de sertissage disponible sur notre site web. */ Per altre dimensioni, vedere tabella di pressatura nel ns. sito web*

Conexiones Standard

Standard series
Embouts série standard
Serie Standard

Casquillos PTFE Liso, perfil liso

Ferrules for smooth PTFE, smooth profile

Jupes PTFE lisse,profil lisse

Boccole PTFE liscio con interno liscio

DN	Referencia Part n°	€
1/4"	880400400	-
5/16"	880400500	-
3/8"	880400600	-
1/2"	880400800	-
5/8"	880401000	-

Casquillos PTFE Corrugado, perfil liso

Ferrules for convoluted PTFE, smoth proflie

Jupes PTFE convoluté, profil lisse

Boccole PTFE corrugato con interno liscio

DN	Referencia Part n°	€
1/4"	880410400	-
5/16"	880410500	-
3/8"	880410600	-
1/2"	880410800	-
5/8"	880411000	-
3/4"	880411200	-

Conexiones Standard

Standard series
Embouts série standard
Serie Standard

Hembras giratorias rectas rosca BSP cono 60°

BSP Swivel female 60° cone

Femelle gaz cylindrique BSP 60°

Femmina diritta BSP sede 60°

DN	ROSCA THREAD	Referencia Part n°	€
3.2 mm	1/8" BSP	**841000201**	-
1/8"	1/8" BSP	**841000202**	-
3/16"	1/8" BSP	**841000203**	-
1/4"	1/8" BSP	**841000204**	-
3/16"	1/4" BSP	**841000403**	-
1/4"	1/4" BSP	**841000404**	-
5/16"	1/4" BSP	**841000405**	-
3/8"	1/4" BSP	**841000406**	-
1/4"	3/8" BSP	**841000604**	-
5/16"	3/8" BSP	**841000605**	-
3/8"	3/8" BSP	**841000606**	-
1/2"	3/8" BSP	**841000608**	-
1/4"	1/2" BSP NEW	**841000804**	-
3/8"	1/2" BSP	**841000806**	-
1/2"	1/2" BSP	**841000808**	-
5/8"	1/2" BSP	**841000810**	-
1/2"	5/8" BSP	**841001008**	-
5/8"	5/8" BSP	**841001010**	-
1/2"	3/4" BSP	**841001208**	-
5/8"	3/4" BSP	**841001210**	-
3/4"	3/4" BSP	**841001212**	-
5/8"	1" BSP	**841001610**	-
3/4"	1" BSP	**841001612**	-
1"	1" BSP	**841001616**	-
1"	1"1/4 BSP	**841002016**	-
1"1/4	1"1/4 BSP	**841002020**	-
1"1/4	1"1/2 BSP	**841002420**	-
1"1/2	1"1/2 BSP	**841002424**	-
1"1/2	2" BSP	**841003224**	-
2"	2" BSP	**841003232**	-
2"	2"1/2 BSP	**841004032**	-
2"1/2	2"1/2 BSP	**841004040**	-
3"	3" BSP	**841004848**	-

Hembras giratorias rectas rosca BSP cono 60° con junta tórica

BSP Swivel female 60° cone with o-ring

Femelle gaz cylindrique BSP 60° avec o-ring

Femmina diritta BSP sede 60° con o'ring

DN	ROSCA THREAD	Referencia Part n°	€
1/4"	1/4" BSP	**841100404**	-
3/8"	3/8" BSP	**841100606**	-
3/8"	1/2" BSP	**841100806**	-
1/2"	1/2" BSP	**841100808**	-
5/8"	1/2" BSP	**841100810**	-
1/2"	3/4" BSP	**841101208**	-
5/8"	3/4" BSP	**841101210**	-
3/4"	3/4" BSP	**841101212**	-
1"	1" BSP	**841101616**	-
1"1/4	1"1/4 BSP	**841102020**	-
1"1/2	1"1/2 BSP	**841102424**	-
2"	2" BSP	**841103232**	-

Hembras giratorias rectas rosca BSP asiento plano

BSP Swivel female flat seat

Femelle fond plat BSP

Femmina BSP sede piana

DN	ROSCA THREAD	Referencia Part n°	€
1/4"	1/4" BSP	**842000404**	-
1/4"	3/8" BSP	**842000604**	-
5/16"	3/8" BSP	**842000605**	-
3/8"	3/8" BSP	**842000606**	-
1/2"	3/8" BSP	**842000608**	-
1/4"	1/2" BSP	**842000804**	-
3/8"	1/2" BSP	**842000806**	-
1/2"	1/2" BSP	**842000808**	-
1/2"	3/4" BSP	**842001208**	-
5/8"	3/4" BSP	**842001210**	-
3/4"	3/4" BSP	**842001212**	-
5/8"	1" BSP	**842001610**	-
3/4"	1" BSP	**842001612**	-
1"	1" BSP	**842001616**	-
1"	1" 1/4 BSP	**842002016**	-
1"1/4	1"1/4 BSP	**842002020**	-
1"1/2	1"1/2 BSP	**842002424**	-
2"	2" BSP	**842003232**	-

Hembras giratorias recta rosca BSP cono 60° doble hexagonal

Double hexagonal BSP Swivel female cone 60°

Femelle BSP cône 60° double hexagonal

Femmina diritta BSP sede 60° doppio esagono

DN	ROSCA THREAD	Referencia Part n°	€
1/4"	1/4" BSP	**844000404**	-
5/16"	3/8" BSP	**844000605**	-
3/8"	3/8" BSP	**844000606**	-
1/2"	1/2" BSP	**844000808**	-
3/4"	3/4" BSP	**844001212**	-
1"	1" BSP	**844001616**	-
1"1/4	1"1/4 BSP	**844002020**	-
1"1/2	1"1/2 BSP	**844002424**	-
2"	2" BSP	**844003232**	-

Conexiones Standard

Standard series
Embouts série standard
Serie Standard

Hembras giratorias 90° rosca BSP cono 60°

BSP Swivel female 60° cone (90° Elbow)

Coude 90° femelle gaz cyl. BSP 60°

Femmina 90° BSP sede 60°

DN	ROSCA THREAD	Referencia Part n°	€
3/16"	1/8" BSP	**841070203***	-
1/4"	1/8" BSP	**841070204**	-
3/16"	1/4" BSP	**841070403**	-
1/4"	1/4" BSP	**841070404**	-
5/16"	1/4" BSP	**841070405***	-
3/8"	1/4" BSP	**841070406**	-
1/4"	3/8" BSP	**841070604**	-
5/16"	3/8" BSP	**841070605**	-
3/8"	3/8" BSP	**841070606**	-
1/2"	3/8" BSP	**841070608**	-
1/4"	1/2" BSP	**841070804**	-
3/8"	1/2" BSP	**841070806**	-
1/2"	1/2" BSP	**841070808**	-
5/8"	5/8" BSP	**841071010**	-
1/2"	3/4" BSP	**841071208**	-
5/8"	3/4" BSP	**841071210**	-
3/4"	3/4" BSP	**841071212**	-
3/4"	1" BSP	**841071612**	-
1"	1" BSP	**841071616**	-
1"	1" 1/4 BSP	**841072016**	-
1"1/4	1"1/4 BSP	**841072020**	-
1"1/2	1"1/2 BSP	**841072424**	-
2"	2" BSP	**841073232**	-

* **Pieza soldada** / **Welded piece* / *Pièce soudé / **Tipo saldato*

Hembras giratorias 90° rosca BSP asiento plano

BSP Swivel female flat seat (90° Elbow)

Coude 90° femelle fond plat BSP

Femmina 90° BSP sede piana

DN	ROSCA THREAD	Referencia Part n°	€
1/4"	1/4" BSP	**842070404**	-
5/16"	3/8" BSP	**842070605**	-
3/8"	3/8" BSP	**842070606**	-
1/2"	1/2" BSP	**842070808**	-
3/4"	3/4" BSP	**842071212**	-
3/4"	1" BSP	**842071612**	-
1"	1" BSP	**842071616**	-
1"1/4	1"1/4 BSP	**842072020**	-
1"1/2	1"1/2 BSP	**842072424**	-
2"	2" BSP	**842073232**	-

Hembras giratorias 45° rosca BSP cono 60°

BSP Swivel female 60° cone (45° Elbow)

Coude 45° femelle gaz cyl. BSP 60°

Femmina 45° BSP sede 60°

DN	ROSCA THREAD	Referencia Part n°	€
3/16"	1/4" BSP	**841080403**	-
1/4"	1/4" BSP	**841080404**	-
1/4"	3/8" BSP	**841080604**	-
5/16"	3/8" BSP	**841080605**	-
3/8"	3/8" BSP	**841080606**	-
1/4"	1/2" BSP	**841080804**	-
3/8"	1/2" BSP	**841080806**	-
1/2"	1/2" BSP	**841080808**	-
5/8"	5/8" BSP	**841081010**	-
1/2"	3/4" BSP	**841081208**	-
5/8"	3/4" BSP	**841081210**	-
3/4"	3/4" BSP	**841081212**	-
3/4"	1" BSP	**841081612**	-
1"	1" BSP	**841081616**	-
1"	1"1/4 BSP	**841082016**	-
1"1/4	1"1/4 BSP	**841082020**	-
1"1/2	1"1/2 BSP	**841082424**	-
2"	2" BSP	**841083232**	-

Hembras giratorias 45° rosca BSP asiento plano

BSP Swivel female flat seat (45° Elbow)

Coude 45° femelle fond plat BSP

Femmina 45° BSP sede piana

DN	ROSCA THREAD	Referencia Part n°	€
1/4"	1/4" BSP	**842080404**	-
5/16"	3/8" BSP	**842080605**	-
3/8"	3/8" BSP	**842080606**	-
3/8"	1/2" BSP	**842080806**	-
1/2"	1/2" BSP	**842080808**	-
3/4"	3/4" BSP	**842081212**	-
3/4"	1" BSP	**842081612**	-
1"	1" BSP	**842081616**	-
1"1/4	1"1/4 BSP	**842082020**	-
1"1/2	1"1/2 BSP	**842082424**	-
2"	2" BSP	**842083232**	-

Hembras giratorias 90° compactas rosca BSP cono 60°

BSP swivel female 60° (90° Compact Elbow)

Coude femelle 90° compact BSP cône 60°

Femmina 90° BSP compatta

DN	ROSCA THREAD	Referencia Part n°	€
1/4"	1/4" BSP	**841270404**	-
3/8"	3/8" BSP	**841270606**	-
1/2"	1/2" BSP	**841270808**	-
3/4"	3/4" BSP	**841271212**	-
1"	1" BSP	**841271616**	-

Conexiones Standard

Standard series
Embouts série standard
Serie Standard

Hembras giratorias 90° rosca BSP cono 60° con junta tórica

BSP Swivel female 60° cone with o-ring (90° Elbow)

Coude 90° femelle gaz cyl. BSP 60° avec o-ring

Femmina 90° BSP sede 60° con o'ring

DN	ROSCA THREAD	Referencia Part n°	€
1/4"	1/4" BSP	**841170404**	-
3/8"	3/8" BSP	**841170606**	-
3/8"	1/2" BSP	**841170806**	-
1/2"	1/2" BSP	**841170808**	-
1/2"	3/4" BSP	**841171208**	-
5/8"	3/4" BSP	**841171210**	-
3/4"	3/4" BSP	**841171212**	-
1"	1" BSP	**841171616**	-
1"1/4	1"1/4 BSP	**841172020**	-
1"1/2	1"1/2 BSP	**841172424**	-
2"	2" BSP	**841173232**	-

Hembras giratorias 45° rosca BSP cono 60° con junta tórica

BSP Swivel female 60° cone with o-ring (45° Elbow)

Coude 45° femelle gaz cyl. BSP 60° avec o-ring

Femmina 45° BSP sede 60° con o'ring

DN	ROSCA THREAD	Referencia Part n°	€
1/4"	1/4" BSP	**841180404**	-
3/8"	3/8" BSP	**841180606**	-
3/8"	1/2" BSP	**841180806**	-
1/2"	1/2" BSP	**841180808**	-
1/2"	3/4" BSP	**841181208**	-
5/8"	3/4" BSP	**841181210**	-
3/4"	3/4" BSP	**841181212**	-
1"	1" BSP	**841181616**	-
1"1/4	1"1/4 BSP	**841182020**	-
1"1/2	1"1/2 BSP	**841182424**	-
2"	2" BSP	**841183232**	-

Juntas para hembra giratoria BSP FKM verde

O'ring for swivel female BSP FKM green

Joint torique pour femelle tournante BSP FKM vert

O´ring FKM verde per femmina girevole BSP

ROSCA THREAD	TAMAÑO SIZE	Referencia Part n°	€
1/4" BSP	6X1	**JTVBSP04**	-
3/8" BSP	8.1X1.6	**JTVBSP06**	-
1/2" BSP	12.1X1.6	**JTVBSP08**	-
5/8" BSP	13.1X1.6	**JTVBSP10**	-
3/4" BSP	17.1X1.6	**JTVBSP12**	-
1" BSP	22.1X1.6	**JTVBSP16**	-
1"1/4 BSP	29.1X1.6	**JTVBSP20**	-
1"1/2 BSP	35.1X1.6	**JTVBSP24**	-
2" BSP	47.35X1.78	**JTVBSP32**	-

Conexiones Standard

Standard series
Embouts série standard
Serie Standard

Machos rosca cilíndrica BSP asiento plano

BSP Male flat seat

Mâle BSP fond plat

Maschio BSP sede piana

DN	ROSCA THREAD	Referencia Part n°	€
3/16"	1/4" BSP	**842120403**	-
1/4"	1/4" BSP	**842120404**	-
5/16"	3/8" BSP	**842120605**	-
3/8"	3/8" BSP	**842120606**	-
1/2"	3/8" BSP	**842120608**	-
3/8"	1/2" BSP	**842120806**	-
1/2"	1/2" BSP	**842120808**	-
5/8"	5/8" BSP	**842121010**	-
3/4"	3/4" BSP	**842121212**	-
3/4"	1" BSP	**842121612**	-
1"	1" BSP	**842121616**	-
1"	1" 1/4 BSP	**842122016**	-
1"1/4	1"1/4 BSP	**842122020**	-
1"1/2	1"1/2 BSP	**842122424**	-
2"	2" BSP	**842123232**	-

Machos rosca cilíndrica BSP cono 60°

BSP Male-parallel 60° cone

Mâle BSP cône 60°

Maschio BSP cilindrico sede 60°

DN	ROSCA THREAD	Referencia Part n°	€
3/16"	1/8" BSP	**841120203**	-
1/4"	1/8" BSP	**841120204**	-
3/16"	1/4" BSP	**841120403**	-
1/4"	1/4" BSP	**841120404**	-
5/16"	1/4" BSP	**841120405**	-
3/8"	1/4" BSP	**841120406**	-
1/4"	3/8" BSP	**841120604**	-
5/16"	3/8" BSP	**841120605**	-
3/8"	3/8" BSP	**841120606**	-
1/2"	3/8" BSP	**841120608**	-
3/8"	1/2" BSP	**841120806**	-
1/2"	1/2" BSP	**841120808**	-
5/8"	5/8" BSP	**841121010**	-
5/8"	3/4" BSP	**841121210**	-
3/4"	3/4" BSP	**841121212**	-
1"	3/4" BSP NEW	**841121216**	-
3/4"	1" BSP	**841121612**	-
1"	1" BSP	**841121616**	-
1"	1"1/4 BSP	**841122016**	-
1"1/4	1"1/4 BSP	**841122020**	-
1"1/4	1"1/2 BSP	**841122420**	-
1"1/2	1"1/2 BSP	**841122424**	-
2"	1" 1/2 BSP	**841122432**	-
2"	2" BSP	**841123232**	-
2" 1/2	2" 1/2 BSP	**841124040**	-

Macho rosca cónica BSPT cono 60°

Male BSPT tapered

Mâle gaz conique BSPT 60°

Maschio conico BSPT sede 60°

DN	ROSCA THREAD	Referencia Part n°	€
1/4"	1/4" BSPT	**841140404**	-
5/16"	1/4" BSPT	**841140405**	-
3/8"	1/4" BSPT	**841140406**	-
1/4"	3/8" BSPT	**841140604**	-
5/16"	3/8" BSPT	**841140605**	-
3/8"	3/8" BSPT	**841140606**	-
1/2"	3/8" BSPT	**841140608**	-
3/8"	1/2" BSPT	**841140806**	-
1/2"	1/2" BSPT	**841140808**	-
5/8"	1/2" BSPT	**841140810**	-
3/4"	1/2" BSPT	**841140812**	-
1/2"	3/4" BSPT	**841141208**	-
5/8"	3/4" BSPT	**841141210**	-
3/4"	3/4" BSPT	**841141212**	-
3/4"	1" BSPT	**841141612**	-
1"	1" BSPT	**841141616**	-
1"	1"1/4 BSPT	**841142016**	-
1"1/4	1"1/4 BSPT	**841142020**	-
1"1/4	1"1/2 BSPT	**841142420**	-
1"1/2	1"1/2 BSPT	**841142424**	-
2"	2" BSPT	**841143232**	-

Conexiones Standard

Standard series
Embouts série standard
Serie Standard

Hembras giratorias rectas rosca NPSM cono 60° doble hexagonal

Double hexagonal NPSM Swivel female cone 60°

Femelle NPSM cône 60° double hexagonal

Femmina diritta NPSM sede 60° doppio esagono

DN	ROSCA THREAD	Referencia Part n°	€
1/4"	1/4" 18h NPSM	**843610404**	-
3/8"	3/8" 18h NPSM	**843610606**	-
1/2"	1/2" 14h NPSM	**843610808**	-
3/4"	3/4" 14h NPSM	**843611212**	-
1"	1" - 11 1/2h NPSM	**843611616**	-

Hembras giratorias rectas rosca NPSM cono 60°

NPSM Swivel female 60° cone

Femelle NPSM cône 60°

Femmina diritta NPSM sede 60°

DN	ROSCA THREAD	Referencia Part n°	€
3/16"	1/4" 18h NPSM	**842610403**	-
1/4"	1/4" 18h NPSM	**842610404**	-
3/8"	3/8" 18h NPSM	**842610606**	-
3/8"	1/2" 14h NPSM	NEW **842610806**	-
1/2"	1/2" 14h NPSM	**842610808**	-
3/4"	3/4" 14h NPSM	**842611212**	-
3/4"	1"-11 1/2h NPSM	**842611612**	-
1"	1"-11 1/2h NPSM	**842611616**	-
1"1/4	1"1/4-11 1/2h NPSM	**842612020**	-
1"1/2	1"1/2-11 1/2h NPSM	**842612424**	-

Hembras giratorias 90° rosca NPSM cono 60°

NPSM Swivel female 60° cone (90° Elbow)

Coude 90° femelle NPSM cône 60°

Femmina 90° NPSM sede 60°

DN	ROSCA THREAD	Referencia Part n°	€
1/4"	1/4" 18h NPSM	**842620404**	-
3/8"	3/8" 18h NPSM	**842620606**	-
1/2"	1/2" 14h NPSM	**842620808**	-
3/4"	3/4" 14h NPSM	**842621212**	-
1"	1"-11 1/2h NPSM	**842621616**	-

Hembras giratorias 45° rosca NPSM cono 60°

NPSM Swivel female 60° cone (45° Elbow)

Coude 45° femelle NPSM cône 60°

Femmina 45° NPSM sede 60°

DN	ROSCA THREAD	Referencia Part n°	€
1/4"	1/4" 18h NPSM	**842630404**	-
3/8"	3/8" 18h NPSM	**842630606**	-
1/2"	1/2" 14h NPSM	**842630808**	-
3/4"	3/4" 14h NPSM	**842631212**	-
1"	1"-11 1/2h NPSM	**842631616**	-

Machos rosca cónica NPT

NPT Male pipe straight

Embout mâle conique NPT (BRIGGS)

Maschio conico NPT sede 60°

DN	ROSCA THREAD	Referencia Part n°	€
1/4"	1/8" NPT	**841610204**	-
3/16"	1/4" NPT	**841610403**	-
1/4"	1/4" NPT	**841610404**	-
5/16"	1/4" NPT	**841610405**	-
3/8"	1/4" NPT	**841610406**	-
1/4"	3/8" NPT	**841610604**	-
5/16"	3/8" NPT	**841610605**	-
3/8"	3/8" NPT	**841610606**	-
1/2"	3/8" NPT	**841610608**	-
1/4"	1/2" NPT	**841610804**	-
3/8"	1/2" NPT	**841610806**	-
1/2"	1/2" NPT	**841610808**	-
5/8"	1/2" NPT	**841610810**	-
3/4"	1/2" NPT	**841610812**	-
1/2"	3/4" NPT	**841611208**	-
5/8"	3/4" NPT	**841611210**	-
3/4"	3/4" NPT	**841611212**	-
1"	3/4" NPT	**841611216**	-
3/4"	1" NPT	**841611612**	-
1"	1" NPT	**841611616**	-
1"	1"1/4 NPT	**841612016**	-
1"1/4	1"1/4 NPT	**841612020**	-
1"	1"1/2 NPT	**841612416**	-
1"1/4	1"1/2 NPT	**841612420**	-
1"1/2	1"1/2 NPT	**841612424**	-
2"	2" NPT	**841613232**	-

Machos giratorios NPT

Swivel male NPT

Mâle tournant NPT

Maschio girevole NPT

DN	ROSCA THREAD	Referencia Part n°	€
1/4"	1/4" NPT	**841650404**	-
3/8"	3/8" NPT	**841650606**	-
3/8"	1/2" NPT	**841650806**	-
1/2"	1/2" NPT	**841650808**	-
3/4"	1/2" NPT	**841650812**	-
1/2"	3/4" NPT	**841651208**	-
3/4"	3/4" NPT	**841651212**	-
3/4"	1" NPT	**841651612**	-
1"	1" NPT	**841651616**	-

Conexiones Standard

Standard series
Embouts série standard
Serie Standard

Hembras giratorias recta JIC 37° doble hexagonal

Double hexagonal JIC 37° Swivel female

Femelle JIC 37° double hexagonal

Femmina diritta JIC 37° doppio esagono

DN	ROSCA THREAD	Referencia Part n°	€
3/16"	7/16" 20h UNF	**842420703**	-
1/4"	7/16" 20h UNF	**842420704**	-
5/16"	7/16" 20h UNF	**842420705**	-
3/8"	7/16" 20h UNF	**842420706**	-
1/4"	1/2" 20h UNF	**842420804**	-
5/16"	1/2" 20h UNF	**842420805**	-
3/8"	1/2" 20h UNF	**842420806**	-
1/4"	9/16" 18h UNF	**842420904**	-
5/16"	9/16" 18h UNF	**842420905**	-
3/8"	9/16" 18h UNF	**842420906**	-
3/8"	3/4" 16h UNF	**842421206**	-
1/2"	3/4" 16h UNF	**842421208**	-
5/8"	3/4"16h UNF	**842421210**	-
3/4"	3/4" 16h UNF	**842421212**	-
1/2"	7/8" 14h UNF	**842421408**	-
5/8"	7/8" 14h UNF	**842421410**	-
3/4	7/8" 14h UNF	**842421412**	-
1/2"	1 1/16" 12h UN	**842421708**	-
5/8"	1"1/16 12h UN	**842421710**	-
3/4"	1"1/16 12h UN	**842421712**	-
1"	1"1/16 12h UN	**842421716**	-
3/4"	1"5/16 12h UN	**842422112**	-
1"	1"5/16 12h UN	**842422116**	-
1"1/4	1"5/8 12h UN	**842422620**	-
1"1/2	1"7/8 12h UN	**842423024**	-
2"	2"1/2 12h UN	**842424032**	-

Hembras giratorias recta JIC 37°

JIC 37° Swivel female

Femelle droite JIC cône 37°

Femmina diritta JIC 37

DN	ROSCA THREAD	Referencia Part n°	€
3.2 mm	7/16" 20h UNF	**841420701**	-
3/16"	7/16" 20h UNF	**841420703**	-
1/4"	7/16" 20h UNF	**841420704**	-
5/16"	7/16" 20h UNF	**841420705**	-
3/16"	1/2" 20h UNF	**841420803**	-
1/4"	1/2" 20h UNF	**841420804**	-
5/16"	1/2" 20h UNF	**841420805**	-
1/4"	9/16" 18h UNF	**841420904**	-
5/16"	9/16" 18h UNF	**841420905**	-
3/8"	9/16" 18h UNF	**841420906**	-
3/8"	3/4" 16h UNF	**841421206**	-
1/2"	3/4" 16h UNF	**841421208**	-
3/8"	7/8" 14h UNF	**841421406**	-
1/2"	7/8" 14h UNF	**841421408**	-
5/8"	7/8" 14h UNF	**841421410**	-
1/2"	1"1/16 12h UN	**841421708**	-
5/8"	1"1/16 12h UN	**841421710**	-
3/4"	1"1/16 12h UN	**841421712**	-
1"	1"1/16 12h UN	**841421716**	-
3/4"	1"5/16 12h UN	**841422112**	-
1"	1"5/16 12h UN	**841422116**	-
1"	1"5/8 12h UN	**841422616**	-
1"1/4	1"5/8 12h UN	**841422620**	-
1" 1/4	1"7/8 12h UN	**841423020**	-
1"1/2	1"7/8 12h UN	**841423024**	-
2"	2"1/2 12h UN	**841424032**	-

Hembras giratorias 90° JIC 37°

JIC 37° Swivel female (90° Elbow)

Coude 90° femelle JIC cône 37°

Femmina 90° JIC sede 37°

DN	ROSCA THREAD	Referencia Part n°	€
3/16"	7/16" 20h UNF	**841380703**	-
1/4"	7/16" 20h UNF	**841380704**	-
5/16"	7/16" 20h UNF	**841380705**	-
1/4"	1/2" 20h UNF	**841380804**	-
5/16"	1/2" 20h UNF	**841380805**	-
1/4"	9/16" 18h UNF	**841380904**	-
5/16"	9/16" 18h UNF	**841380905**	-
3/8"	9/16" 18h UNF	**841380906**	-
3/8"	3/4" 16h UNF	**841381206**	-
1/2"	3/4" 16h UNF	**841381208**	-
3/8"	7/8" 14h UNF	**841381406**	-
1/2"	7/8" 14h UNF	**841381408**	-
5/8"	7/8" 14h UNF	**841381410**	-
1/2"	1"1/16 12h UN	**841381708**	-
5/8"	1"1/16 12h UN	**841381710**	-
3/4"	1"1/16 12h UN	**841381712**	-
3/4"	1" 5/16 12h UN	**841382112**	-
1"	1"5/16 12h UN	**841382116**	-
1"	1"5/8 12h UN	**841382616**	-
1"1/4	1"5/8 12h UN	**841382620**	-
1" 1/4	1" 7/8 12h UN	**841383020**	-
1"1/2	1"7/8 12h UN	**841383024**	-
2"	2"1/2 12h UN	**841384032**	-

Hembras giratorias 45° JIC 37°

JIC 37° Swivel female (45° Elbow)

Coude 45° femelle JIC cône 37°

Femmina 45° JIC sede 37°

DN	ROSCA THREAD	Referencia Part n°	€
3/16"	7/16" 20h UNF	**841390703**	-
1/4"	7/16" 20h UNF	**841390704**	-
1/4"	1/2" 20h UNF	**841390804**	-
5/16"	1/2" 20h UNF	**841390805**	-
1/4"	9/16" 18h UNF	**841390904**	-
5/16"	9/16" 18h UNF	**841390905**	-
3/8"	9/16" 18h UNF	**841390906**	-
3/8"	3/4" 16h UNF	**841391206**	-
1/2"	3/4" 16h UNF	**841391208**	-
3/8"	7/8" 14h UNF	**841391406**	-
1/2"	7/8" 14h UNF	**841391408**	-
5/8"	7/8" 14h UNF	**841391410**	-
5/8"	1"1/16 12h UN	**841391710**	-
3/4"	1"1/16 12h UN	**841391712**	-
3/4"	1"5/16 12h UN	**841392112**	-
1"	1"5/16 12h UN	**841392116**	-
1"	1"5/8 12h UN	**841392616**	-
1"1/4	1"5/8 12h UN	**841392620**	-
1"1/4	1"7/8 12h UN	**841393020**	-
1"1/2	1"7/8 12h UN	**841393024**	-
2"	2"1/2 12h UN	**841394032**	-

Conexiones Standard

Standard series
Embouts série standard
Serie Standard

Machos rosca JIC cono 37°

Male JIC 37°

Mâle fixe JIC cône 37°

Maschio JIC 37°

DN	ROSCA THREAD	Referencia Part n°	€
3/16"	7/16" 20h UNF	**841400703**	-
1/4"	7/16" 20h UNF	**841400704**	-
1/4"	1/2" 20h UNF	**841400804**	-
5/16"	1/2" 20h UNF	**841400805**	-
1/4"	9/16" 18h UNF	**841400904**	-
5/16"	9/16" 18h UNF	**841400905**	-
3/8"	9/16" 18h UNF	**841400906**	-
1/4"	3/4" 16h UNF	**841401204**	-
3/8"	3/4" 16h UNF	**841401206**	-
1/2"	3/4" 16h UNF	**841401208**	-
3/8"	7/8" 14h UNF	**841401406**	-
1/2"	7/8" 14h UNF	**841401408**	-
5/8"	7/8" 14h UNF	**841401410**	-
5/8"	1"1/16 12h UN	**841401710**	-
3/4"	1"1/16 12h UN	**841401712**	-
1"	1"1/16 12h UN	**841401716**	-
3/4"	1"5/16 12h UN	**841402112**	-
1"	1"5/16 12h UN	**841402116**	-
1"	1"5/8 12h UN	**841402616**	-
1"1/4	1"5/8 12h UN	**841402620**	-
1"1/2	1"7/8 12h UN	**841403024**	-
2"	2"1/2 12h UN	**841404032**	-

Machos rosca JIC cono 37° con junta

Male JIC 37° with o'ring

Mâle fixe JIC cône 37° avec o'ring

Maschio JIC sede 37° con o'ring

DN	ROSCA THREAD	Referencia Part n°	€
1/4"	7/16" 20h UNF	**841410704**	-
3/8"	9/16" 18h UNF	**841410906**	-
1/2"	3/4" 16h UNF	**841411208**	-
3/4"	1"1/16 12h UN	**841411712**	-
1"	1"5/16 12h UN	**841412116**	-
1"1/4	1"5/8 12h UN	**841412620**	-
1"1/2	1"7/8 12h UN	**841413024**	-
2"	2"1/2 12h UN	**841414032**	-

Hembras giratorias 90° compactas JIC 37°

JIC 37° Swivel female (90° Compact Elbow)

Coude femelle 90° compact JIC cône 37°

Femmina 90° JIC sede 37° compatta

DN	ROSCA THREAD	Referencia Part n°	€
1/4"	7/16" 20h UNF	**841370704**	-
3/8"	9/16" 18h UNF	**841370906**	-
1/2"	3/4" 16h UNF	**841371208**	-
3/4"	1"1/16 12h UNF	**841371712**	-
1"	1"5/16 12h UNF	**841372116**	-

Conexiones Standard

Standard series
Embouts série standard
Serie Standard

Hembras giratorias rectas DKOL rosca Métrica cono 24°

Metric female swivel L with o'ring 24° cone

Femelle Métrique L avec o'ring cône 24°

Femmina metrica sede 24°+O'ring serie leggera L

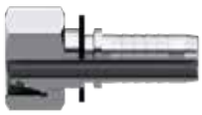

DN	TUBO PIPE	SERIE SERIES	ROSCA THREAD	Referencia Part n°	€
3/16"	6	L	M12x1.5	**84804120603**	-
1/4"	6	L	M12x1.5	**84804120604**	-
1/4"	8	L	M14x1.5	**84804140804**	-
5/16"	8	L	M14x1.5	**84804140805**	-
3/8"	8	L	M 14x1.5	**84804140806**	-
1/4"	10	L	M16x1.5	**84804161004**	-
5/16"	10	L	M16x1.5	**84804161005**	-
3/8"	10	L	M16x1.5	**84804161006**	-
1/4"	12	L	M18x1.5	**84804181204**	-
5/16"	12	L	M18x1.5	**84804181205**	-
3/8"	12	L	M18x1.5	**84804181206**	-
1/2"	12	L	M 18x1.5	**84804181208**	-
1/4"	15	L	M22x1.5	**84804221504**	-
5/16"	15	L	M22x1.5	**84804221505**	-
3/8"	15	L	M22x1.5	**84804221506**	-
1/2"	15	L	M22x1.5	**84804221508**	-
5/8"	15	L	M22x1,5	**84804221510**	-
3/8"	18	L	M26x1,5	**84804261806**	-
1/2"	18	L	M26x1.5	**84804261808**	-
5/8"	18	L	M26x1.5	**84804261810**	-
3/4"	18	L	M26x1.5	**84804261812**	-
1/2"	22	L	M30x2	**84804302208**	-
5/8"	22	L	M30x2	**84804302210**	-
3/4"	22	L	M30x2	**84804302212**	-
3/4"	28	L	M36x2	**84804362812**	-
1"	28	L	M36x2	**84804362816**	-
1"	35	L	M45x2	**84804453516**	-
1"1/4	35	L	M45x2	**84804453520**	-
1"1/4	42	L	M52x2	**84804524220**	-
1"1/2	42	L	M52x2	**84804524224**	-
2"	42	L	M52x2	**84804524232**	-

Hembras giratorias rectas DKOS rosca Métrica cono 24°

Metric female swivel S with o'ring 24° cone

Femelle Métrique S avec o'ring cône 24°

Femmina metrica sede 24°+O'ring serie pesante S

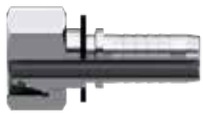

DN	TUBO PIPE	SERIE SERIES	ROSCA THREAD	Referencia Part n°	€
1/4"	6	S	M14x1.5	**84804140604**	-
1/4"	8	S	M16x1.5	**84804160804**	-
5/16"	8	S	M16x1.5	**84804160805**	-
3/8"	8	S	M16x1.5	**84804160806**	-
1/4"	10	S	M18x1.5	**84804181004**	-
5/16"	10	S	M18x1.5	**84804181005**	-
3/8"	10	S	M18x1.5	**84804181006**	-
1/4"	12	S	M20x1.5	**84804201204**	-
5/16"	12	S	M20x1.5	**84804201205**	-
3/8"	12	S	M20x1.5	**84804201206**	-
1/2"	12	S	M20x1.5	**84804201208**	-
5/16"	14	S	M22x1.5	**84804221405**	-
3/8"	14	S	M22x1.5	**84804221406**	-
1/2"	14	S	M22X1.5	**84804221408**	-
1/4"	16	S	M24x1.5	**84804241604**	-
5/16"	16	S	M24x1.5	**84804241605**	-
3/8"	16	S	M24x1.5	**84804241606**	-
1/2"	16	S	M24x1.5	**84804241608**	-
5/8"	16	S	M24x1.5	**84804241610**	-
1/2"	20	S	M30x2	**84804302008**	-
5/8"	20	S	M30x2	**84804302010**	-
3/4"	20	S	M30x2	**84804302012**	-
5/8"	25	S	M36x2	**84804362510**	-
3/4"	25	S	M36x2	**84804362512**	-
1"	25	S	M36x2	**84804362516**	-
3/4"	30	S	M42x2	**84804423012**	-
1"	30	S	M42x2	**84804423016**	-
1"1/4	38	S	M52x2	**84804523820**	-

Conexiones Standard

Standard series
Embouts série standard
Serie Standard

Machos rosca Métrica cono 24°

Metric Male stud 24° cone

Mâle métrique cône 24°

Maschio Metrico sede 24°

DN	TUBO PIPE	SERIE SERIES	ROSCA THREAD	Referencia Part n°	€
1/4"	6	L	M12x1.5	**84203120604**	-
1/4"	8	L	M14x1.5	**84203140804**	-
1/4"	10	L	M16x1.5	**84203161004**	-
5/16"	10	L	M16x1.5	**84203161005**	-
3/8"	10	L	M16x1.5	**84203161006**	-
1/4"	12	L	M18x1.5	**84203181204**	-
5/16"	12	L	M18x1.5	**84203181205**	-
3/8"	12	L	M18x1.5	**84203181206**	-
3/8"	15	L	M22x1.5	**84203221506**	-
1/2"	15	L	M22x1.5	**84203221508**	-
1/2"	18	L	M26x1.5	**84203261808**	-
5/8"	18	L	M26x1.5	**84203261810**	-
3/4"	22	L	M30x2	**84203302212**	-
1"	28	L	M36x2	**84203362816**	-
1"1/4	35	L	M45x2	**84203453520**	-
1"1/2	42	L	M52x2	**84203524224**	-
1/4"	6	S	M14x1.5	**84203140604**	-
1/4"	8	S	M16x1.5	**84203160804**	-
1/4"	10	S	M18x1.5	**84203181004**	-
5/16"	10	S	M18x1.5	**84203181005**	-
3/8"	10	S	M18x1.5	**84203181006**	-
5/16"	12	S	M20x1.5	**84203201205**	-
3/8"	12	S	M20x1.5	**84203201206**	-
3/8"	14	S	M22x1.5	**84203221406**	-
1/2"	14	S	M22x1.5	**84203221408**	-
1/2"	16	S	M24x1.5	**84203241608**	-
5/8"	20	S	M30x2	**84203302010**	-
3/4"	20	S	M30x2	**84203302012**	-
3/4"	25	S	M36x2	**84203362512**	-
1"	25	S	M36x2	**84203362516**	-
1"	30	S	M42x2	**84203423016**	-
1"1/4	38	S	M52x2	**84203523820**	-

Hembras giratorias rectas rosca Métrica cono 24°/60°

Metric female swivel 24°/60° cone

Femelle Métrique cône 24°/60°

Femmina Metrica sede 24°/60°

DN	TUBO PIPE	SERIE SERIES	ROSCA THREAD	Referencia Part n°	€
1/4"	8	L	M14x1.5	**84404140804**	-
1/4"	10	L	M16x1.5	**84404161004**	-
5/16"	10	L	M16x1.5	**84404161005**	-
3/8"	10	L	M16x1.5	**84404161006**	-
5/16"	12	L	M18x1.5	**84404181205**	-
3/8"	12	L	M18x1.5	**84404181206**	-
3/8"	15	L	M22x1.5	**84404221506**	-
1/2"	15	L	M22x1.5	**84404221508**	-
5/8"	18	L	M26x1.5	**84404261810**	-

Conexiones Standard

Standard series
Embouts série standard
Serie Standard

Hembras giratorias DKO 90° Métricas cono 24°

Metric swivel female with o'ring 24° cone (90° Elbow)

Coude 90° femelle Métrique cône 24° avec o'ring

Femmina Metrica 90° sede 24° con o'ring

DN	TUBO PIPE	ROSCA THREAD	SERIE SERIES	Referencia Part n°	€
3/16"	6	M12x1.5	L	**84305120603**	-
1/4"	6	M12x1.5	L	**84305120604**	-
1/4"	8	M14x1.5	L	**84305140804**	-
5/16"	8	M14x1.5	L	**84305140805**	-
1/4"	10	M16x1.5	L	**84305161004**	-
5/16"	10	M16x1.5	L	**84305161005**	-
3/8"	10	M16x1.5	L	**84305161006**	-
1/4"	12	M18x1.5	L	**84305181204**	-
5/16"	12	M18x1.5	L	**84305181205**	-
3/8"	12	M18x1.5	L	**84305181206**	-
1/2"	12	M18x1.5	L	**84305181208**	-
3/8"	15	M22x1.5	L	**84305221506**	-
1/2"	15	M22x1.5	L	**84305221508**	-
5/8"	15	M22x1,5	L	**84305221510**	-
1/2"	18	M26x1.5	L	**84305261808**	-
5/8"	18	M26x1.5	L	**84305261810**	-
5/8"	22	M30x2	L	**84305302210**	-
3/4"	22	M30x2	L	**84305302212**	-
3/4"	28	M36x2	L	**84305362812**	-
1"	28	M36x2	L	**84305362816**	-
1" 1/4	35	M45x2	L	**84305453520**	-
1" 1/2	42	M52x2	L	**84305524224**	-
1/4"	6	M14x1.5	S	**84305140604**	-
1/4"	8	M16x1.5	S	**84305160804**	-
5/16"	8	M16x1.5	S	**84305160805**	-
1/4"	10	M18x1.5	S	**84305181004**	-
5/16"	10	M18X1.5	S	**84305181005**	-
3/8"	10	M18x1.5	S	**84305181006**	-
1/4"	12	M20x1.5	S	**84305201204**	-
5/16"	12	M20x1.5	S	**84305201205**	-
3/8"	12	M20x1.5	S	**84305201206**	-
1/2"	12	M20x1.5	S	**84305201208**	-
3/8"	14	M22x1.5	S	**84305221406**	-
1/2"	14	M22x1.5	S	**84305221408**	-
3/8"	16	M24x1.5	S	**84305241606**	-
1/2"	16	M24x1.5	S	**84305241608**	-
3/8"	20	M30x2	S	**84305302006**	-
1/2"	20	M30x2	S	**84305302008**	-
5/8"	20	M30x2	S	**84305302010**	-
3/4"	20	M30x2	S	**84305302012**	-
3/4"	25	M36x2	S	**84305362512**	-
1"	25	M36x2	S	**84305362516**	-
5/8"	30	M42x2	S	**84305423010**	-
3/4"	30	M42X2	S	**84305423012**	-
1"	30	M42x2	S	**84305423016**	-
1" 1/4	38	M52x2	S	**84305523820**	-

Hembras giratorias DKO 45° Métricas cono 24°

Metric swivel female with o'ring 24° cone (45° Elbow)

Coude 45° femelle Métrique cône 24° avec o'ring

Femmina Metrica 45° sede 24° con o'ring

DN	TUBO PIPE	SERIE SERIES	ROSCA THREAD	Referencia Part n°	€
3/16"	6	L	M12x1.5	**84306120603**	-
1/4"	6	L	M12x1.5	**84306120604**	-
1/4"	8	L	M14x1.5	**84306140804**	-
5/16"	8	L	M14x1.5	**84306140805**	-
1/4"	10	L	M16x1.5	**84306161004**	-
5/16"	10	L	M16x1.5	**84306161005**	-
3/8"	10	L	M16x1.5	**84306161006**	-
1/4"	12	L	M18x1.5	**84306181204**	-
5/16"	12	L	M18x1.5	**84306181205**	-
3/8"	12	L	M18x1.5	**84306181206**	-
1/2"	12	L	M18x1.5	**84306181208**	-
3/8"	15	L	M22x1.5	**84306221506**	-
1/2"	15	L	M22x1.5	**84306221508**	-
5/8"	15	L	M22x1.5 NEW	**84306221510**	-
1/2"	18	L	M26X1.5	**84306261808**	-
5/8"	18	L	M26x1.5	**84306261810**	-
5/8"	22	L	M30x2	**84306302210**	-
3/4"	22	L	M30x2	**84306302212**	-
3/4"	28	L	M36x2	**84306362812**	-
1"	28	L	M36x2	**84306362816**	-
1" 1/4	35	L	M45x2	**84306453520**	-
1"1/2	42	L	M52x2	**84306524224**	-
1/4"	6	S	M14x1.5	**84306140604**	-
1/4"	8	S	M16x1.5	**84306160804**	-
5/16"	8	S	M16x1.5	**84306160805**	-
1/4"	10	S	M18x1.5	**84306181004**	-
3/8"	10	S	M18x1.5	**84306181006**	-
1/4"	12	S	M20x1.5	**84306201204**	-
5/16"	12	S	M20x1.5	**84306201205**	-
3/8"	12	S	M20x1.5	**84306201206**	-
1/2"	12	S	M20x1.5	**84306201208**	-
3/8"	14	S	M22x1.5	**84306221406**	-
3/8"	16	S	M24x1.5	**84306241606**	-
1/2"	16	S	M24x1.5	**84306241608**	-
3/8"	20	S	M30x2	**84306302006**	-
1/2"	20	S	M30x2	**84306302008**	-
5/8"	20	S	M30x2	**84306302010**	-
3/4"	20	S	M30x2	**84306302012**	-
3/4"	25	S	M36x2	**84306362512**	-
1"	25	S	M36x2	**84306362516**	-
3/4"	30	S	M42x2	**84306423012**	-
1"	30	S	M42x2	**84306423016**	-
1"1/4	38	S	M52x2	**84306523820**	-

***Consultar /** On request **/ Sur demande /** Su richiesta

Conexiones Standard

Standard series
Embouts série standard
Serie Standard

Hembras giratorias rectas rosca Métrica 24° sin junta tórica

Metric female swivel without o'ring 24° cone

Femelle Métrique cône 24° sans o'ring

Femmina Metrica sede 24° senza o'ring

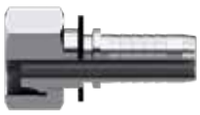

DN	TUBO PIPE	SERIE SERIES	ROSCA THREAD	Referencia Part n°	€
1/4"	8	L	M14x1.5	**84814140804**	-
5/16"	10	L	M16x1.5	**84814161005**	-
3/8"	12	L	M18x1.5	**84814181206**	-
1/2"	15	L	M22x1.5	**84814221508**	-
5/8"	18	L	M26x1.5	**84814261810**	-
3/4"	22	L	M30x2	**84814302212**	-
1"	28	L	M36x2 NEW	**84814362816**	-

Hembras giratorias 90° Métricas 24° sin junta tórica

Metric swivel female without o'ring 24° cone (90° Elbow)

Coude 90° femelle Métrique cône 24° sans o'ring

Femmina Metrica 90° sede 24° senza o'ring

DN	TUBO PIPE	SERIE Serie	ROSCA THREAD	Referencia Part n°	€
1/4"	8	L	M14x1.5	**84315140804**	-
5/16"	10	L	M16x1.5	**84315161005**	-
3/8"	12	L	M18x1.5	**84315181206**	-
1/2"	15	L	M22x1.5	**84315221508**	-
5/8"	18	L	M26x1.5	**84315261810**	-
3/4"	22	L	M30x2	**84315302212**	-

Hembras giratorias 45° Métricas 24° sin junta tórica

Metric swivel female without o'ring 24° cone (45° Elbow)

Coude 45° femelle Métrique cône 24° sans o'ring

Femmina Metrica 45° sede 24° senza o'ring

DN	TUBO PIPE	SERIE SERIES	ROSCA THREAD	Referencia Part n°	€
1/4"	8	L	M14x1.5	**84316140804**	-
5/16"	10	L	M16x1.5	**84316161005**	-
3/8"	12	L	M18x1.5	**84316181206**	-
1/2"	15	L	M22x1.5	**84316221508**	-
5/8"	18	L	M26x1.5	**84316261810**	-
3/4"	22	L	M30x2	**84316302212**	-

- Sin junta tórica
- Especial mangueras PTFE
- Altas temperaturas
- Resistencia química

- Without o'ring
- PTFE Hose
- High temperature
- Chemist resistance

Conexiones Standard

Standard series
Embouts série standard
Serie Standard

Espigas lisas rectas Métricas ISO 8434-1 / DIN2353

Metric standpipe for ISO 8434-1 / DIN2353 fittings

Embout lisse droit Métrique ISO 8434-1 / DIN2353

Estremitá tubolare per raccordi ISO 8434-1 / DIN2353

DN	TUBO PIPE	Referencia Part n°	€
3.2 mm	6	**841580601**	-
1/8"	6	**841580602**	-
3/16"	6	**841580603**	-
1/4"	6	**841580604**	-
3/16"	8	**841580803**	-
1/4"	8	**841580804**	-
5/16"	8	**841580805**	-
3/8"	8	**841580806**	-
1/4"	10	**841581004**	-
5/16"	10	**841581005**	-
3/8"	10	**841581006**	-
1/4"	12	**841581204**	-
5/16"	12	**841581205**	-
3/8"	12	**841581206**	-
1/2"	12	**841581208**	-
3/8"	14	**841581406**	-
1/2"	14	**841581408**	-
3/8"	15	**841581506**	-
1/2"	15	**841581508**	-
1/2"	16	**841581608**	-
1/2"	18	**841581808**	-
5/8"	18	**841581810**	-
3/4"	18	**841581812**	-
1/2"	20	**841582008**	-
5/8"	20	**841582010**	-
3/4"	20	**841582012**	-
5/8"	22	**841582210**	-
3/4"	22	**841582212**	-
3/4"	25	**841582512**	-
1"	25	**841582516**	-
1"	28	**841582816**	-
1"	30	**841583016**	-
1"1/4	35	**841583520**	-
1"1/4	38	**841583820**	-
1"1/2	38	**841583824**	-
1"1/2	42	**841584224**	-

Espigas lisas rectas para tubo en pulgadas

Fractional Straight standpipe

Embout lisse tube pouce

Estremitá tubolare serie pollici

DN	TUBO PIPE	Referencia Part n°	€
1/4"	6.4	**841590604**	-
3/8"	9.5	**841590906**	-
3/8"	12.7	**841591206**	-
1/2"	12.7	**841591208**	-
5/8"	12.7	**841591210**	-
1/2"	15.8	**841591508**	-
5/8"	15.8	**841591510**	-
5/8"	19.05	**841591910**	-
3/4"	19.05	**841591912**	-
1"	25.4	**841592516**	-

Espigas lisas rectas HEX para tubo en pulgadas TrΔle® LOK

NEW

Fractional HEX Straight standpipe TrΔle® LOK

Embout lisse tube HEX pouce TrΔle® LOK

Estremitá tubolare HEX serie pollici TrΔle® LOK

DN	TUBO PIPE	Referencia Part n°	€
1/4"	6.4	**841690404**	-
3/8"	9.5	**841690606**	-
1/2"	12.7	**841690808**	-
3/4"	19.05	**841691212**	-
1"	25.4	**841691616**	-

Espigas lisas 90° Métricas ISO 8434-1 / DIN2353

Metric standpipe ISO 8434-1 / DIN2353 fittings (90° Elbow)

Embout lisse coude 90° Métrique ISO 8434-1 / DIN2353

Estremitá tubolare 90° per raccordi ISO 8434-1 / DIN2353

DN	TUBO PIPE	Referencia Part n°	€
1/8"	6	**842580602**	-
3/16"	6	**842580603**	-
1/4"	6	**842580604**	-
3/16"	8	**842580803**	-
1/4"	8	**842580804**	-
5/16"	8	**842580805**	-
1/4"	10	**842581004**	-
5/16"	10	**842581005**	-
3/8"	10	**842581006**	-
1/4"	12	**842581204**	-
5/16"	12	**842581205**	-
3/8"	12	**842581206**	-
1/2"	12	**842581208**	-
3/8"	14	**842581406**	-
1/2"	14	**842581408**	-
3/8"	15	**842581506**	-
1/2"	15	**842581508**	-
1/2"	16	**842581608**	-
1/2"	18	**842581808**	-
5/8"	18	**842581810**	-
5/8"	20	**842582010**	-
3/4"	20	**842582012**	-
5/8"	22	**842582210**	-
3/4"	22	**842582212**	-
3/4"	25	**842582512**	-
1"	28	**842582816**	-
1"	30	**842583016**	-

Espigas lisas 90° para tubo en pulgadas

Fractional standpipe (90° Elbow)

Embout lisse coude 90° tube pouce

Estremitá tubolare 90° serie pollici

DN	TUBO PIPE	Referencia Part n°	€
1/4"	6.4	**842590604**	-
3/8"	9.5	**842590906**	-
1/2"	12.7	**842591208**	-

Conexiones Standard

Standard series
Embouts série standard
Serie Standard

Espigas lisas 45° Métricas ISO 8434-1 / DIN2353

Metric standpipe ISO 8434-1 / DIN2353 fittings (45° Elbow)

Embout lisse coude 45° ISO 8434-1 / DIN2353

Estremitá tubolare 45° per raccordi ISO 8434-1 / DIN2353

DN	TUBO PIPE	Referencia Part n°	€
1/8"	6	843580602	-
3/16"	6	843580603	-
1/4"	6	843580604	-
3/16"	8	843580803	-
1/4"	8	843580804	-
5/16"	8	843580805*	-
1/4"	10	843581004	-
5/16"	10	843581005	-
3/8"	10	843581006	-
1/4"	12	843581204	-
5/16"	12	843581205	-
3/8"	12	843581206	-
1/2"	12	843581208	-
3/8"	14	843581406	-
1/2"	14	843581408	-
3/8"	15	843581506	-
1/2"	15	843581508	-
1/2"	16	843581608	-
1/2"	18	843581808	-
5/8"	18	843581810	-
5/8"	20	843582010	-
1/2"	20	843582012	-
5/8"	22	843582210	-
3/4"	22	843582212	-
3/4"	25	843582512	-
1"	28	843582816	-
1"	30	843583016	-

* **Hasta fin de existencias** / *Until end of stock* / Jusqu´à la fin du stock / *Fino ad esaurimento*

Espigas lisas 45° para tubo en pulgadas

Fractional Standpipe for inch tube (45° Elbow)

Embout lisse coude 45° tube pouce

Estremitá tubolare 45° serie pollici

DN	TUBO PIPE	Referencia Part n°	€
1/4"	6,4	843590604	-
3/8"	9,5	843590906	-
1/2"	12,7	843591208	-

Espigas de prensar dobles

Double crimp standpipe

Embout double jonction

Giunzione tubo-tubo

DN	Referencia Part n°	€
1/4"	843000404	-
5/16"	843000505	-
3/8"	843000606	-
1/2"	843000808	-
3/4"	843001212	-
1"	843001616	-
1"1/4	843002020	-
1" 1/2	843002424	-
2"	843003232	-

Espigas soldables

Welding standpipes

Embout lisse à souder

Inserti a saldare

DN	Referencia Part n°	€
1/8"	840000200*	-
3/16"	840000300	-
1/4"	840000400	-
5/16"	840000500	-
3/8"	840000600	-
1/2"	840000800	-
5/8"	840001000	-
3/4"	840001200	-
1"	840001600	-
1"1/4	840002000	-
1"1/2	840002400	-
2"	840003200	-
2"1/2	840004000	-

* **Hasta fin de existencias** / *Until end of stock* / Jusqu´à la fin du stock / *Fino as esauramiento*

Espigas para Hidrolavadoras

Standpipes for hidrowashing machines

Embouts lisses pour hydrolavage

Inserti per idropulitrici

TUBO PIPE	ROSCA THREAD	Referencia Part n°	€
5/16"	M 22x1.5	8305005	-
3/8"	M 22x1.5	8305006	-

Tuercas para terminales hidrolavadoras inox

Hexagonal nuts for hydrowashing machines

Écrous pour hidronettoyages

Dado per idropulitrici

ROSCA THREAD	Referencia Part n°	€
M22x1.5	KZTHAP22	-

Conexiones Standard

Standard series
Embouts série standard
Serie Standard

Orientables BSP

Banjo BSP

Banjo droit gaz BSP

Raccordo ad occhio BSP

DN	Ø	Referencia Part n°	€
1/4"	1/4"	**841110404**	-
1/4"	3/8"	**841110604**	-
5/16"	3/8"	**841110605**	-
3/8"	3/8"	**841110606**	-
1/2"	3/8"	**841110608**	-
3/8"	1/2"	**841110806**	-
1/2"	1/2"	**841110808**	-
3/4"	3/4"	**841111212**	-
1"	1"	**841111616**	-

Tornillo orientable simple BSP

BSP Bolt for banjo

Vis creuse simple pour banjo gaz

Bullone forato BSP

ROSCA THREAD	Referencia Part n°	€
1/8" BSP	**Z109002**	*
1/4" BSP	**Z109004**	*
3/8" BSP	**Z109006**	*
1/2" BSP	**Z109008**	*
3/4" BSP	**Z109012**	*
1" BSP	**Z109016**	*

***Ver precios en p.176 (ADAPTADORES BSP)** / **See prices in p.176 (BSP ADAPTORS)* / *Prix à la p.176 (ADAPTEURS BSP) / **Vedere prezzi p.176 (ADATTATORI BSP)*

Orientables Métricos

Banjo Metric

Banjo droit Métrique

Raccordo ad occhio Metrico

DN	Ø		Referencia Part n°	€
3/16"	M10x1		**841161003**	-
1/4"	M10x1		**841161004**	-
5/16"	M10x1	NEW	**841161005**	-
1/4"	M12x1.5		**841161204**	-
1/4"	M14x1.5		**841161404**	-
3/8"	M14x1.5		**841161406**	-
5/16"	M16x1.5		**841161605**	-
3/8"	M16x1.5		**841161606**	-
3/8"	M18x1.5		**841161806**	-
1/2"	M18x1.5		**841161808**	-
1/2"	M20x1.5		**841162008**	-
1/2"	M22x1.5		**841162208**	-
3/4"	M26x1.5		**841162612**	-

Tornillo orientable simple Métrico

Metric bolt for banjo

Vis creuse simple for banjo Métrique

Bullone forato Metrico

ROSCA THREAD	Referencia Part n°	€
M12X1.5	**Z109212**	*
M14X1.5	**Z109214**	*
M16X1.5	**Z109216**	*
M18X1.5	**Z109218**	*
M22X1.5	**Z109222**	*
M26X1.5	**Z109226**	*
M30X2	**Z109230**	*

***Ver precios en p.176 (ADAPTADORES BSP)** / **See prices in p.176 (BSP ADAPTORS)* / *Prix à la p.176 (ADAPTEURS BSP) / **Vedere prezzi p.176 (ADATTATORI BSP)*

***Consultar /** On request **/ Sur demande /** Su richiesta

Conexiones Standard

Standard series
Embouts série standard
Serie Standard

Bridas rectas SAE 3000 PSI

3000 PSI SAE Straight Flange / Code 61

Bride SAE droite série 3000 PSI

Flangia diritta SAE 3000

DN	Ø	Referencia Part n°	€
1/2"	30,2	**841820808**	-
1/2"	38,1	**841821208**	-
5/8"	38,1	**841821210**	-
3/4"	38,1	**841821212**	-
3/4"	44,5	**841821612**	-
1"	44,5	**841821616**	-
1"	50,8	**841822016**	-
1"1/4	50,8	**841822020**	-
1"1/4	60,3	**841822420**	-
1"1/2	60,3	**841822424**	-
1"1/2	71,4	**841823224**	-
2"	71,4	**841823232**	-
2" 1/2	84,1	**841824040**	-
3"	101,6	**841824848**	-

Bridas 90° SAE 3000 PSI

3000 PSI SAE Flange (90° Elbow) / Code 61

Bride SAE coude 90° série 3000 PSI

Flangia 90° SAE 3000

DN	Ø	Referencia Part n°	€
1/2"	30,2	**841830808**	-
1/2"	38,1	**841831208**	-
5/8"	38,1	**841831210**	-
3/4"	38,1	**841831212**	-
3/4"	44,5	**841831612**	-
1"	44,5	**841831616**	-
1"	50,8	**841832016**	-
1"1/4	50,8	**841832020**	-
1"1/4	60,3	**841832420**	-
1"1/2	60,3	**841832424**	-
1"1/2	71,4	**841833224**	-
2"	71,4	**841833232**	-

Bridas 45° SAE 3000 PSI

3000 PSI SAE Flange (45° Elbow) / Code 61

Bride SAE coude 45° série 3000 PSI

Flangia 45° SAE 3000

DN	Ø	Referencia Part n°	€
1/2"	30.2	**841840808**	-
1/2"	38.1	**841841208**	-
5/8"	38.1	**841841210**	-
3/4"	38.1	**841841212**	-
3/4"	44.5	**841841612**	-
1"	44.5	**841841616**	-
1"	50.8	**841842016**	-
1"1/4	50.8	**841842020**	-
1"1/4	60.3	**841842420**	-
1"1/2	60.3	**841842424**	-
1"1/2	71.4	**841843224**	-
2"	71.4	**841843232**	-

Bridas rectas SAE 6000 PSI

6000 PSI SAE Straight Flange / Code 62

Bride SAE droite série 6000 PSI

Flangia diritta SAE 6000

DN	Ø	Referencia Part n°	€
1/2"	31,8	**842820808**	-
1/2"	41,3	**842821208**	-
5/8"	41,3	**842821210**	-
3/4"	41,3	**842821212**	-
3/4"	47,6	**842821612**	-
1"	47,6	**842821616**	-
1"	54	**842822016**	-
1"1/4	54	**842822020**	-
1"1/4	63,5	**842822420**	-
1"1/2	63,5	**842822424**	-
1"1/2	79,4	**842823224**	-
2"	79,4	**842823232**	-

Bridas 90° SAE 6000 PSI

6000 PSI SAE Flange (90° Elbow) / Code 62

Bride SAE coude 90° série 6000 PSI

Flangia 90° SAE 6000

DN	Ø	Referencia Part n°	€
1/2"	31,8	**842830808**	-
1/2"	41,3	**842831208**	-
5/8"	41,3	**842831210**	-
3/4"	41,3	**842831212**	-
3/4"	47,6	**842831612**	-
1"	47,6	**842831616**	-
1"	54	**842832016**	-
1"1/4	54	**842832020**	-
1"1/4	63,5	**842832420**	-
1"1/2	63,5	**842832424**	-
1"1/2	79,4	**842833224**	-
2"	79,4	**842833232**	-

Bridas 45° SAE 6000 PSI

6000 PSI SAE Flange (45° Elbow) / Code 62

Bride SAE coude 45° série 6000 PSI

Flangia 45° SAE 6000

DN	Ø	Referencia Part n°	€
1/2"	31.8	**842840808**	-
1/2"	41.3	**842841208**	-
5/8"	41.3	**842841210**	-
3/4"	41.3	**842841212**	-
3/4"	47.6	**842841612**	-
1"	47.6	**842841616**	-
1"	54	**842842016**	-
1"1/4	54	**842842020**	-
1"1/4	63.5	**842842420**	-
1"1/2	63.5	**842842424**	-
1"1/2	79.4	**842843224**	-
2"	79.4	**842843232**	-

Conexiones Standard

Standard series
Embouts série standard
Serie Standard

Brida partida pasante

SAE Split flange

Demi-bride de fixation

Semiflangia SAE

SERIE SERIES	Ø INT. Ø INNER	TAMAÑO SIZE	Referencia Part n°	€
3000 PSI	30.2	1/2"	**ZBBP308302**	-
3000 PSI	38.1	3/4"	**ZBBP312381**	-
3000 PSI	44.5	1"	**ZBBP316445**	-
3000 PSI	50.8	1"1/4	**ZBBP320508**	-
3000 PSI	60.3	1"1/2	**ZBBP324603**	-
3000 PSI	71.4	2"	**ZBBP332714**	-
3000 PSI	84.1	2" 1/2	**ZBBP340841**	-
3000 PSI	102.4	3"	**ZBBP3481024**	-
3000 PSI	127	4"	**ZBBP364127**	-
6000 PSI	31.8	1/2"	**ZBBP608318**	-
6000 PSI	41.3	3/4"	**ZBBP612413**	-
6000 PSI	47.6	1"	**ZBBP616476**	-
6000 PSI	54	1"1/4	**ZBBP620540**	-
6000 PSI	63.5	1"1/2	**ZBBP624635**	-
6000 PSI	79.4	2"	**ZBBP632794**	-

€/par / *€/pair* / €/paire / *€/coppia*

Brida entera pasante

SAE Flange

Bride de fixation monobloc

Flangia monoblocco SAE

SERIE SERIES	Ø INT. Ø INNER	TAMAÑO SIZE	Referencia Part n°	€
3000 PSI	30.2	1/2"	**ZBBE308302**	-
3000 PSI	38.1	3/4"	**ZBBE312381**	-
3000 PSI	44.5	1"	**ZBBE316445**	-
3000 PSI	50.8	1"1/4	**ZBBE320508**	-
3000 PSI	60.3	1"1/2	**ZBBE324603**	-
3000 PSI	71.4	2"	**ZBBE332714**	-
3000 PSI	41	2" 1/2	**ZBBE340841**	-
3000 PSI	102.4	3"	**ZBBE3481024**	-
3000 PSI	127	4"	**ZBBE364127**	-
6000 PSI	31.8	1/2"	**ZBBE608318**	-
6000 PSI	41.3	3/4"	**ZBBE612413**	-
6000 PSI	47.6	1"	**ZBBE616476**	-
6000 PSI	54	1"1/4	**ZBBE620540**	-
6000 PSI	63.5	1"1/2	**ZBBE624635**	-
6000 PSI	79.4	2"	**ZBBE632794**	-

Tornillos para bridas SAE

Screws for SAE flanges

Vis pour brides SAE

Vite per flangia SAE

ROSCA THREAD	TAMAÑO SIZE		€
M8X30	3000-6000 PSI 1/2"	**ZTB8X30**	*
M10X35	3000 PSI 3/4"-1"	**ZTB10X35**	*
M10X40	3000 PSI 1" 1/4 - 6000 PSI 3/4"	**ZTB10X40**	*
M12X45	3000 PSI 1"1/2-2"-2"1/2-6000 PSI 1"	**ZTB12X45**	*
M14X45	6000 PSI 1"1/4	**ZTB14X45**	*
M16X50	3000 PSI 3"-3"1/2"-4"- 6000 PSI 1" 1/2	**ZTB16X50**	*
M20X70	6000 PSI 2"	**ZTB20X70**	*

***Ver precios en p.154** / **See prices p.154* / **Voir prix p.154* / **Vedere prezzi p. 154*

Contrabrida roscada

SAE counter-flange

Contre-bride passage total

Controflangia SAE

SERIE SERIES	Ø INT. Ø INNER	TAMAÑO SIZE	Referencia Part n°	€
3000 PSI	30,2	1/2"	**ZBCE308302**	-
3000 PSI	38,1	3/4"	**ZBCE312381**	-
3000 PSI	44,5	1"	**ZBCE316445**	-
3000 PSI	50,8	1"1/4	**ZBCE320508**	-
3000 PSI	60,3	1"1/2	**ZBCE324603**	-
3000 PSI	71,4	2"	**ZBCE332714**	-
6000 PSI	31,8	1/2"	**ZBCE608318**	-
6000 PSI	41,3	3/4"	**ZBCE612413**	-
6000 PSI	47,6	1"	**ZBCE616476**	-
6000 PSI	54	1"1/4	**ZBCE620540**	-
6000 PSI	63,5	1"1/2	**ZBCE624635**	-
6000 PSI	79,4	2"	**ZBCE632794**	-

Juntas para bridas SAE 3000/6000 PSI

Seals for 3000/6000 PSI flange

Joints pour bride série 3000/6000

Guarnizioni per flangia SAE 3000/6000 PSI

TAMAÑO SIZE	Ø INT. Ø INNER	Ø EXT. Ø OUTER	Referencia Part n°	€
1/2"	17.02	25.40	**JBR08**	*
3/4"	23.36	31.72	**JBR12**	*
1"	31.24	39.62	**JBR16**	*
1"1/4	36.07	44.45	**JBR20**	*
1"1/2	45.34	53.98	**JBR24**	*
2"	54.86	63.50	**JBR32**	*

***Ver precios en Conducciones Hidráulicas y Neumáticas** / **See prices in Hydraulic and Pneumatic Connectors' Catalogue* / *Voir prix dans le Catalogue Connectique Hydraulique et Pneumatique / **Vedere prezzi nel listino Condutture Idrauliche e Pneumatiche*

Juntas tóricas para bridas SAE 3000/6000 PSI

O´rings for 3000/6000 PSI flange

O´rings pour bride série 3000/6000 PSI

O´rings per flangia SAE 3000/6000 PSI

TAMAÑO SIZE	Ø INT. Ø INNER	Referencia Part n°	€
1/2"	18.64	**18.64X3.53**	*
3/4"	24.99	**24.99X3.53**	*
1"	32.92	**32.92X3.53**	*
1"1/4	37.70	**37.70X3.53**	*
1"1/2	47.22	**47.22X3.53**	*
2"	56.74	**56.74X3.53**	*

***Ver precios en Conducciones Hidráulicas y Neumáticas** / **See prices in Hydraulic and Pneumatic Connectors' Catalogue* / *Voir prix dans le Catalogue Connectique Hydraulique et Pneumatique / **Vedere prezzi nel listino Condutture Idrauliche e Pneumatiche*

***Consultar** / On request / **Sur demande** / Su richiesta

Conexiones Standard

Standard series
Embouts série standard
Serie Standard

Hembras giratorias rectas ORFS doble hexagonal

Double hexagonal ORFS Swivel female straight

Femelle droite ORFS double hexagonal

Femmina diritta ORFS doppio esagono

DN	ROSCA THREAD	Referencia Part n°	€
1/4"	9/16"-18h	**849010904**	-
1/4"	11/16"-16h	**849011104**	-
5/16"	11/16"-16h	**849011105**	-
3/8"	11/16"-16h	**849011106**	-
3/8"	13/16"-16h	**849011306**	-
1/2"	13/16"-16h	**849011308**	-
1/2"	1"-14h	**849011608**	-
5/8"	1"-14h	**849011610**	-
1/2"	1"3/16-12h	**849011908**	-
5/8"	1"3/16-12h	**849011910**	-
3/4"	1"3/16-12h	**849011912**	-
3/4"	1"7/16-12h	**849012312**	-
1"	1"7/16-12h	**849012316**	-
1"1/4	1" 11/16-12h	**849012720**	-
1"1/2	2"-12h	**849013224**	-
2"	2"-12h	**849013232**	-

Machos ORFS

ORFS Male

Mâle ORFS

Maschio ORFS

DN	ROSCA THREAD	Referencia Part n°	€
1/4"	9/16"-18h	**849120904**	-
5/16"	11/16"-16h	**849121105**	-
3/8"	11/16"-16h	**849121106**	-
1/2"	13/16"-16h	**849121308**	-
5/8"	1"-14h	**849121610**	-
3/4"	1"3/16-12h	**849121912**	-
1"	1"7/16-12h	**849122316**	-
1"1/4	1" 11/16-12h	**849122720**	-
1"1/2	2"-12h	**849123224**	-

Hembras giratorias 90° ORFS

ORFS Swivel female (90° Elbow)

Coude 90° femelle ORFS

Femmina 90° ORFS

DN	ROSCA THREAD	Referencia Part n°	€
1/4"	9/16"-18h	**849070904**	-
1/4"	11/16"-16h	**849071104**	-
5/16"	11/16"-16h	**849071105**	-
3/8"	11/16"-16h	**849071106**	-
3/8"	13/16"-16h	**849071306**	-
1/2"	13/16"-16h	**849071308**	-
1/2"	1"-14h	**849071608**	-
5/8"	1"-14h	**849071610**	-
5/8"	1"3/16-12h	**849071910**	-
3/4"	1"3/16-12h	**849071912**	-
3/4"	1"7/16-12h	**849072312**	-
1"	1"7/16-12h	**849072316**	-
1"1/4	1" 11/16-12h	**849072720**	-
1"1/2	2"-12h	**849073224**	-

Hembras giratorias 45° ORFS

ORFS Swivel female (45° Elbow)

Coude 45° femelle ORFS

Femmina 45° ORFS

DN	ROSCA THREAD	Referencia Part n°	€
1/4"	9/16"-18h	**849080904**	-
1/4"	11/16"-16h	**849081104**	-
5/16"	11/16"-16h	**849081105**	-
3/8"	11/16"-16h	**849081106**	-
3/8"	13/16"-16h	**849081306**	-
1/2"	13/16"-16h	**849081308**	-
1/2"	1"-14h	**849081608**	-
5/8"	1"-14h	**849081610**	-
5/8"	1"3/16-12h	**849081910**	-
3/4"	1"3/16-12h	**849081912**	-
3/4"	1"7/16-12h	**849082312**	-
1"	1"7/16-12h	**849082316**	-
1"1/4	1" 11/16-12h	**849082720**	-
1"1/2	2"-12h	**849083224**	-

Macho O'Ring Boss

O'Ring Boss Male

Mâle O'Ring Boss

Maschio O'Ring Boss

DN	ROSCA THREAD	Referencia Part n°	€
1/4"	7/16"-20h UNF	**847120604**	-
3/8"	9/16"-18h UNF	**847121006**	-
1/2"	3/4"-16h UNF	**847121208**	-
5/8"	7/8"-14h UNF	**847121610**	-
3/4"	1"1/16-12h UN	**847122012**	-
1"	1"5/16-12h UN	**847122516**	-

Conexiones Serie BW+ R13/R15 No Pelar

Fittings BW+ Series R13/R15 No Skive
Embouts R13/R15 Série BW+ Sans denuder
Raccordi R13/R15 Serie BW+ senza spellatura

Casquillos R13/R15 para serie BW/BW+

Ferrules R13/R15 for fittings BW/BW+ series

Jupes R13/R15 pour embouts série BW/BW+

Boccole a pressare per R13/R15 per raccordi serie BW/BW+

DN	Referencia Part n°	€
1"1/4	**ZAC690102000**	-
1"1/2	**ZAC690102400**	-
2"	**ZAC690103200**	-

Hembras gir. rectas BSP cono 60° doble hexagonal c/J

BSP Swivel female 60° cone double hexagonal with o'ring

Femelle tournante gaz cyl BSP 60° double hexagonale avec o'ring

Femmina diritta BSP sede 60° doppia esagono con o'ring

DN	ROSCA THREAD	Referencia Part n°	€
1"1/4	1"1/4 BSP	**Z664102020**	-
1"1/2	1"1/2 BSP	**Z664102424**	-
2"	2" BSP	**Z664103232**	-

Hasta fin de existencias / *Until end of stock* / Jusqu´à la fin du stock / *Fino ad esaurimento*

Hembras giratorias 90° BSP cono 60° con junta

BSP Swivel female 60° cone with o'ring (90° Elbow)

Coude 90° femelle tournante gaz cyl BSP 60° avec joint

Femmina a 90° BSP sede 60° con o'ring

DN	ROSCA THREAD	Referencia Part n°	€
1"1/4	1"1/4 BSP	**Z661172020**	-

Hasta fin de existencias / *Until end of stock* / Jusqu´à la fin du stock / *Fino ad esaurimento*

Hembras giratorias 45° BSP cono 60° con junta

BSP Swivel female 60° cone with o'ring (45° Elbow)

Hembras giratorias 45° BSP cono 60° avec o'ring

Femmina a 45° BSP sede 60° con o'ring

DN	ROSCA THREAD	Referencia Part n°	€
1"1/4	1"1/4 BSP	**Z661182020**	-

Hasta fin de existencias / *Until end of stock* / Jusqu´à la fin du stock / *Fino ad esaurimento*

Machos cilíndricos BSP 60°

BSP Male 60° cone

Mâle gaz cylindrique BSP 60°

Maschio BSP cilindrico sede 60°

DN	ROSCA THREAD	Referencia Part n°	€
1"1/4	1"1/4 BSP	**Z661122020**	-
1"1/2	1"1/2 BSP	**Z661122424**	-
2"	2" BSP	**Z661123232**	-

Hembras gir rectas BSP (60°) doble hex c/J tca eng.

NEW

Double hexagonal BSP Swivel female cone 60° with o'ring wire nut

Femelle BSP cône 60° double hexagonal avec joint torique écrou à douille

Femmina diritta BSP sede 60° doppio esagono con o'ring dado spinato

DN	ROSCA THREAD	Referencia Part n°	€
1"1/4	1"1/4 BSP	**Z665102020**	-
1"1/2	1"1/2 BSP	**Z665102424**	-
2"	2" BSP	**Z665103232**	-

Hembras gir 90° BSP (60°) c/j tca engargolada

NEW

BSP 60° cone Swivel female (90° Elbow) with o'ring wire nut

Coude 90° femelle gaz cylindrique BSP 60° avec joint torique écrou à jonc

Femmina 90° BSP sede 60° con o'ring dado spinato

DN	ROSCA THREAD	Referencia Part n°	€
1"1/4 BSP	1"1/4 BSP	**Z665172020**	-
1"1/2 BSP	1"1/2 BSP	**Z665172424**	-
2" BSP	2" BSP	**Z665173232**	-

Hembras gir 45° BSP (60°) c/j tca engargolada

NEW

BSP 60° cone Swivel female (45° Elbow) with o'ring wire nut

Coude 45° femelle gaz cylindrique BSP 60° avec joint torique écrou à jonc

Femmina 45° BSP sede 60° con o'ring dado spinato

DN	ROSCA THREAD	Referencia Part n°	€
1"1/4 BSP	1"1/4	**Z665182020**	-
1"1/2 BSP	1"1/2	**Z665182424**	-
2" BSP	2"	**Z665183232**	-

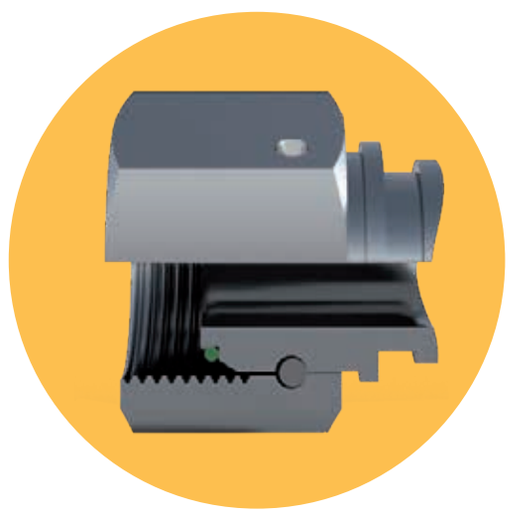

Conexiones Serie BW+ R13/R15 No Pelar

Fittings BW+ Series R13/R15 No Skive
Embouts R13/R15 Série BW+ Sans denuder
Raccordi R13/R15 Serie BW+ senza spellatura

Hembras gir rectas NPSM (60°) doble hexagonal con junta

Double hexagonal NPSM female 60° cone with o'ring
Femelle NPSM cône 60° double hexagonal avec joint torique
Femmina diritta NPSM sede 60° doppio esagono con o'ring

DN	ROSCA THREAD	Referencia Part n°	€
1"1/4	1"1/4 NPSM	**Z664612020**	-
1"1/2	1"1/2 NPSM	**Z664612424**	-
2"	2" NPSM	**Z664613232**	-

Machos cónicos NPT

NPT Male pipe straight
Mâle conique NPT
Maschio conico NPT

DN	ROSCA THREAD	Referencia Part n°	€
1"1/4	1"1/4 NPT	**Z661612020**	-
1"1/2	1"1/2 NPT	**Z661612424**	-
2"	2" NPT	**Z661613232**	-

Hembras giratorias rectas JIC 37° doble hexagonal

Double Hexagonal JIC 37° Swivel female
Femelle JIC 37° double hexagonal
Femmina diritta JIC 37° doppio esagono

DN	ROSCA THREAD	Referencia Part n°	€
1"1/4	1"5/8 12h UN	**Z662422620**	-
1"1/2	1"7/8 12h UN	**Z662423024**	-
2"	2"1/2 12h UN	**Z662424032**	-

Hembras giratorias 90° JIC 37°

JIC 37° Swivel female (90° Elbow)
Coude 90° femelle JIC 37°
Femmina gir. 90° JIC 37°

DN	ROSCA THREAD	Referencia Part n°	€
1"1/4	1"5/8 12h UN	**Z661382620**	-
1"1/2	1"7/8 12h UN	**Z661383024**	-
2"	2"1/2 12h UN	**Z661384032**	-

Hembras giratorias 45° JIC 37°

JIC 37° Swivel female (45° Elbow)
Coude 45° femelle JIC 37°
Femmina gir. 45° JIC 37°

DN	ROSCA THREAD	Referencia Part n°	€
1"1/4	1"5/8 12h UN	**Z661392620**	-
1"1/2	1"7/8 12h UN	**Z661393024**	-
2"	2"1/2 12h UN	**Z661394032**	-

Machos JIC 37° con junta

JIC 37° male with o'ring
Mâle JIC 37° avec joint torique
Maschio JIC 37° con o'ring

DN	ROSCA THREAD	Referencia Part n°	€
1"1/4	1"5/8 12h UNF	**Z661412620**	-
1"1/2	1"7/8 12h UNF	**Z661413024**	-
2"	2"1/2 12h UNF	**Z661414032**	-

Conexiones Serie BW+ R13/R15 No Pelar

Fittings BW+ Series R13/R15 No Skive
Embouts R13/R15 Série BW+ Sans denuder
Raccordi R13/R15 Serie BW+ senza spellatura

Hembras giratorias rectas ORFS doble hexagonal

ORFS Swivel female straight

Femelle droite ORFS

Femmina diritta ORFS

DN	ROSCA THREAD	Referencia Part n°	€
1" 1/4	1"11/16-12h	**Z669012720**	-
1" 1/2	2"-12h	**Z669013224**	-

Hembras giratorias 90° ORFS asiento plano

ORFS Swivel female (90° Elbow)

Coude 90° femelle ORFS

Femmina 90° ORFS

DN	ROSCA THREAD	Referencia Part n°	€
1" 1/4	1"11/16-12h	**Z669072720**	-
1" 1/2	2"-12h	**Z669073224**	-

Hembras giratorias 45° ORFS asiento plano

ORFS Swivel female (45° Elbow)

Coude 45° femelle ORFS

Femmina 45° ORFS

DN	ROSCA THREAD	Referencia Part n°	€
1" 1/4	1"11/16-12h	**Z669082720***	-
1" 1/2	2"-12h	**Z669083224**	-

*

Machos ORFS

ORFS Male

Mâle ORFS

Maschio ORFS

DN	ROSCA THREAD	Referencia Part n°	€
1"1/4	1"11/16-12h	**Z669122720**	-
1"1/2	2"-12h	**Z669123224**	-

Hembras giratorias Métricas cono 24° con junta tórica

Metric swivel female 24° seat with o'ring

Femelle Métrique 24° avec o'ring

Femmina Metrica sede 24° con o'ring

DN	TUBO PIPE	SERIE SERIES	ROSCA THREAD	Referencia Part n°	€
1"1/4	38	S	M52X2	**Z66204523820**	-
1"1/2	38	S	M52X2	**Z66204523824**	-

Hembras giratorias 90° Métricas cono 24° con junta tórica

Metric swivel female 24° seat with o'ring (90° Elbow)

Coude 90° femelle Métrique 24° avec o'ring

Femmina Metrica 90° sede 24° con o'ring

DN	TUBO PIPE	SERIE SERIES	ROSCA THREAD	Referencia Part n°	€
1"1/4	38	S	M52X2	**Z66205523820**	-

Hembras giratorias 45° Métricas cono 24° con junta tórica

Metric swivel female 24° seat with o'ring (45° Elbow)

Coude 45° femelle Métrique 24° avec o'ring

Femmina Metrica 45° sede 24°

DN	TUBO PIPE	SERIE SERIES	ROSCA THREAD	Referencia Part n°	€
1"1/4	38	S	M52X2	**Z66206523820**	-

Machos fijos Métricos cono 24°

Metric male stud 24° cone

Mâle Métrique cône 24°

Maschio Metrico sede 24° con o'ring

DN	TUBO PIPE	SERIE SERIES	ROSCA THREAD	Referencia Part n°	€
1"1/4	38	S	M52x2	**Z66203523820**	-

Conexiones Serie BW+ R13/R15 No Pelar

Fittings BW+ Series R13/R15 No Skive
Embouts R13/R15 Série BW+ Sans denuder
Raccordi R13/R15 Serie BW+ senza spellatura

Bridas recta SAE 6000 PSI

6000 PSI SAE Straight Flange / Code 62

Bride SAE droite série 6000 PSI

Flangia diritta SAE 6000

DN	Ø	Referencia Part n°	€
1"1/4	54	**Z662822020**	-
1"1/4	63.5	**Z662822420**	-
1"1/2	63.5	**Z662822424**	-
2"	54	**Z662822032**	-
2"	79.4	**Z662823232**	-

Bridas a 90° SAE 6000 PSI

6000 PSI SAE Flange (90° Elbow) / Code 62

Bride SAE coude 90° série 6000 PSI

Flangia 90° SAE 6000

DN	Ø		Referencia Part n°	€
1"1/4	54		**Z662832020**	-
1"1/4	63.5	NEW	**Z662832420**	-
1"1/2	63.5		**Z662832424**	-
2"	79.4		**Z662833232**	-

Bridas a 45° SAE 6000 PSI

6000 PSI SAE Flange (45° Elbow) / Code 62

Bride SAE coude 45° série 6000 PSI

Flangia 45° SAE 6000

DN	Ø	Referencia Part n°	€
1"1/4	54	**Z662842020**	-
1"1/2	63.5	**Z662842424**	-
2"	79.4	**Z662843232**	-

Conexiones Interlock

Interlock series
Embouts Interlock
Serie Interlock

Casquillos Interlock 4SH

Ferrules DIN 20023 - 4SH Interlock

Jupes à sertir DIN 20023 - 4SH Interlock

Boccola Interlock 4SH

DN	MANGUERA HOSE	Referencia Part n°	€
3/4"	4SH / R13 / R15	**ZA610101200**	-
1"	4SH / R13 / R15	**ZA610101600**	-
1"1/4	4SH	**ZA610102000**	-
1"1/2	4SH	**ZA610102400**	-
2"	4SH	**ZA610103200**	-

Casquillos Interlock R13/R15

Ferrules SAE 100 R13/R15 Interlock

Jupes à sertir R13/R15 Interlock

Boccola Interlock R13/R15

DN	Referencia Part n°	€
1" 1/4	**Z610102000**	-
1"1/2	**Z610102400**	-
2"	**Z610103200**	-

Para 3/4" y 1" son los mismos casquillos que en 4SH / *3/4" and 1" are the same ferrules as in 4SH* / 3/4" et 1" sont les mêmes jupes que pour 4SH / *Per 3/4" e 1" si utilizza la boccola 4SH*

Hembras giratoria 90° BSP cono 60° con junta

BSP 60° cone Swivel female Interlock (90° Elbow) with o'ring
Coude 90° femelle gaz cylindrique BSP 60° Interlock avec joint torique

Femmina 90° BSP sede 60° Interlock con o'ring

DN	ROSCA THREAD	Referencia Part n°	€
1"1/4	1"1/4 BSP	**Z641072020**	-
2"	2" BSP	**Z641073232**	-

Hasta fin de existencias / *Until end of stock* / Jusqu´à la fin du stock / *Fino ad esaurimento*

Hembras giratoria 45° BSP cono 60° con junta

BSP 60° cone Swivel female Interlock (45° Elbow) with o'ring
Coude 45° femelle gaz cylindrique BSP 60° Interlock avec joint torique

Femmina 45° BSP sede 60° Interlock con o'ring

DN	ROSCA THREAD	Referencia Part n°	€
3/4"	3/4" BSP	**Z641081212**	-
2"	2" BSP	**Z641083232**	-

Hasta fin de existencias / *Until end of stock* / Jusqu´à la fin du stock / *Fino ad esaurimento*

Machos cilíndricos BSP cono 60°

BSP 60° Male cone

Mâle gaz cylindrique BSP 60° Interlock

Maschio BSP cilindrico sede 60° Interlock

DN	ROSCA THREAD	Referencia Part n°	€
3/4"	3/4" BSP	**Z641121212**	-
1"	1" BSP	**Z641121616**	-
1"1/4	1"1/4 BSP	**Z641122020**	-
1"1/2	1"1/2 BSP	**Z641122424**	-
2"	2" BSP	**Z641123232**	-

Machos cónicos NPT

NPT Male pipe straight Interlock

Mâle conique NPT Interlock

Maschio conico NPT Interlock

DN	ROSCA THREAD	Referencia Part n°	€
3/4"	3/4" NPT	**Z641611212**	-
1"	1" NPT	**Z641611616**	-
1"1/4	1"1/4 NPT	**Z641612020**	-
1"1/2	1"1/2 NPT	**Z641612424**	-
2"	2" NPT	**Z641613232**	-

Conexiones Interlock

Interlock series
Embouts Interlock
Serie Interlock

Hembras gir rectas BSP (60°) con junta (tca engargolada)

BSP 60° cone Swivel female Interlock with o'ring wire nut
Femelle droite gaz cylindrique BSP 60° Interlock avec joint torique écrou à jonc
Femmina diritta BSP sede 60° Interlock con o'ring dado spinato

DN	ROSCA THREAD	Referencia Part n°	€
3/4"	3/4" BSP	**Z645001212**	-
1"	1" BSP	**Z645001616**	-
1"1/4	1"1/4 BSP	**Z645002020**	-
1"1/2	1"1/2 BSP	**Z645002424**	-
2"	2" BSP	**Z645003232**	-

Hembras gir 90° BSP (60°) con junta (tca engargolada)

BSP 60° cone Swivel female Interlock (90° Elbow) with o'ring wire nut
Coude 90° femelle gaz cylindrique BSP 60° Interlock avec joint torique écrou à jonc
Femmina 90° BSP sede 60° Interlock con o'ring dado spinato

DN	ROSCA THREAD	Referencia Part n°	€
3/4"	3/4" BSP	**Z645071212**	-
1"	1" BSP	**Z645071616**	-
1"1/4	1"1/4 BSP	**Z645072020**	-
1"1/2	1"1/2 BSP	**Z645072424**	-
2"	2" BSP	**Z645073232**	-

Hembras gir 45° BSP (60°) con junta (tca engargolada)

BSP 60° cone Swivel female Interlock (45° Elbow) with o'ring wire nut
Coude 45° femelle gaz cylindrique BSP 60° Interlock avec joint torique écrou à jonc
Femmina 45° BSP sede 60° Interlock con o'ring dado spinato

DN	ROSCA THREAD	Referencia Part n°	€
3/4"	3/4" BSP	**Z645081212**	-
1"	1" BSP	**Z645081616**	-
1"1/4	1"1/4 BSP	**Z645082020**	-
1"1/2	1"1/2 BSP	**Z645082424**	-
2"	2" BSP	**Z645083232**	-

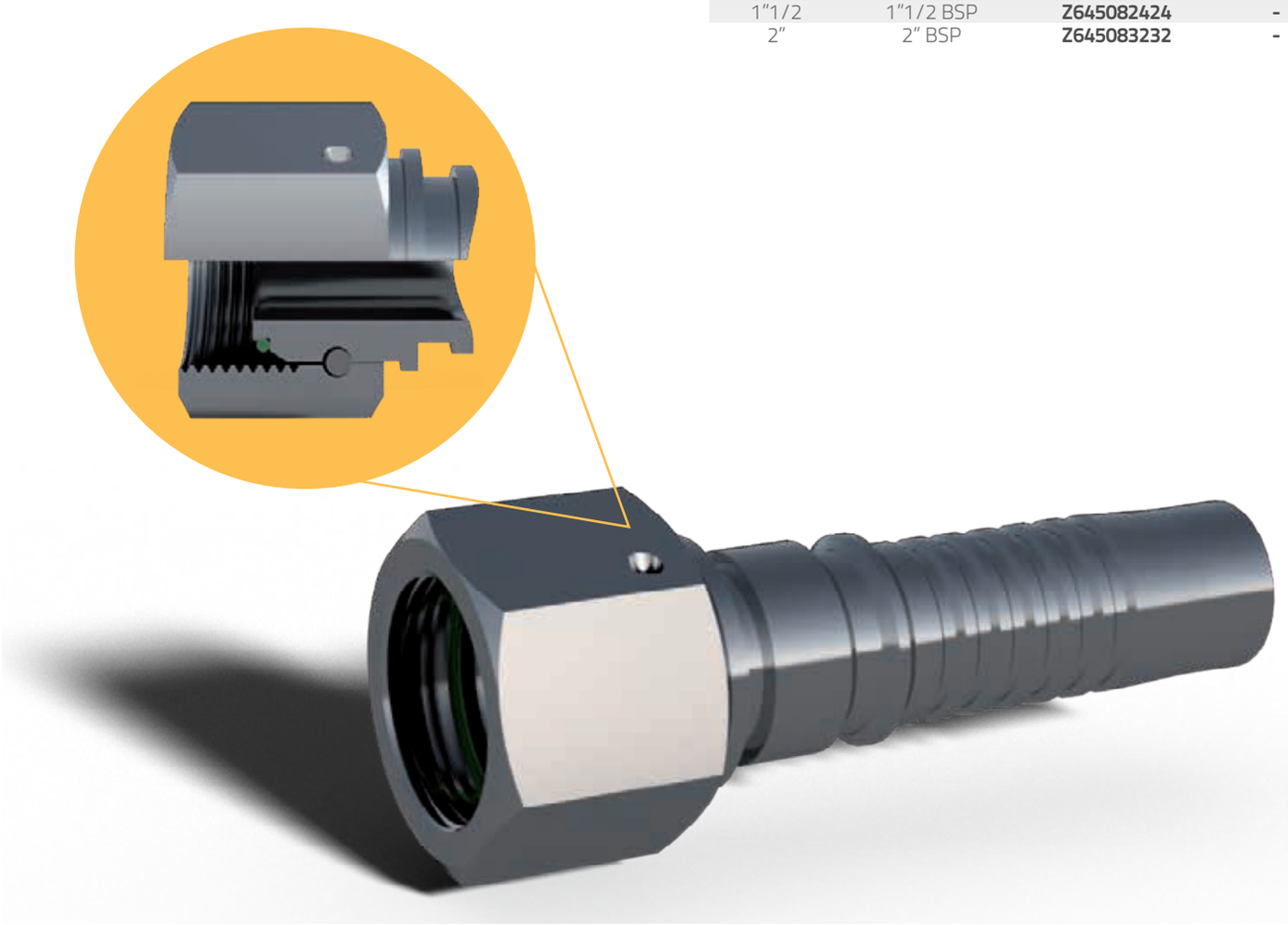

***Consultar /** On request **/ Sur demande /** Su richiesta

Conexiones Interlock

Interlock series
Embouts Interlock
Serie Interlock

Hembras giratorias JIC 37° doble hexagonal Interlock

Double hexagonal JIC 37° Swivel female

Femelle JIC 37° double hexagonal

Femmina diritta JIC 37° doppio esagono Interlock

DN	ROSCA THREAD	Referencia Part n°	€
3/4"	1"1/16 12h UN	**Z642421712**	-
1"	1"5/16 12h UN	**Z642422116**	-
1"1/4	1"5/8 12h UN	**Z642422620**	-
1"1/2	1"7/8 12h UN	**Z642423024**	-
2"	2"1/2 12h UN	**Z642424032**	-

Hembras giratorias rectas JIC 37° Interlock

JIC 37° Swivel female Interlock

Femelle tourn.droite JIC 37° Interlock

Femmina diritta JIC 37° Interlock

DN	ROSCA THREAD	Referencia Part n°	€
3/4"	1"1/16 12h UN	**Z641421712**	-
1"	1"5/16 12h UN	**Z641422116**	-
1"1/4	1"5/8 12h UN	**Z641422620**	-
1"1/4	1"7/8 12h UN	**Z641423020**	-
1"1/2	1"7/8 12h UN	**Z641423024**	-
2"	2"1/2 12h UN	**Z641424032**	-

Machos JIC 37° Interlock

JIC 37° male Interlock

Mâle JIC 37° Interlock

Maschio JIC 37° Interlock

DN	ROSCA THREAD	Referencia Part n°	€
3/4"	1"1/16 12h UN	**Z641401712**	-
1"	1"5/16 12h UN	**Z641402116**	-
1"1/4	1"5/8 12h UN	**Z641402620**	-
1"1/2	1"7/8 12h UN	**Z641403024**	-
2"	2"1/2 12h UN	**Z641404032**	-

Hembras giratorias 90° JIC 37° Interlock

JIC 37° Swivel female Interlock (90° Elbow)

Coude 90° femelle tournante JIC 37° Interlock

Femmina 90° JIC 37° Interlock

DN	ROSCA THREAD	Referencia Part n°	€
3/4"	1"1/16 12h UN	**Z641381712**	-
1"	1"5/16 12h UN	**Z641382116**	-
1"1/4	1"5/8 12h UN	**Z641382620**	-
1"1/2	1"7/8 12h UN	**Z641383024**	-
2"	2"1/2 12h UN	**Z641384032**	-

Hembras giratorias 45° JIC 37° Interlock

JIC 37° Swivel female Interlock (45° Elbow)

Coude 45° femelle tournante JIC 37° Interlock

Femmina 45° JIC 37° Interlock

DN	ROSCA THREAD	Referencia Part n°	€
3/4"	1"1/16 12h UN	**Z641391712**	-
1"	1"5/16 12h UN	**Z641392116**	-
1"1/4	1"5/8 12h UN	**Z641392620**	-
1"1/2	1"7/8 12h UN	**Z641393024**	-
2"	2"1/2 12h UN	**Z641394032**	-

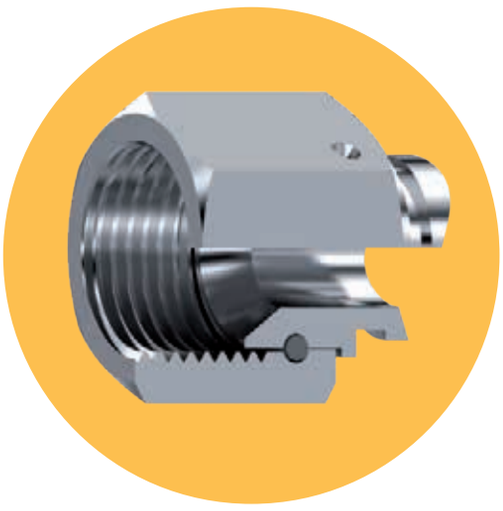

Bajo Consulta
On Request

Conexiones Interlock

Interlock series
Embouts Interlock
Serie Interlock

Hembras gir rectas Métricas 24° Interlock con junta tórica

Metric swivel female 24° seat serie S Interlock with o'ring

Femelle droite Métrique 24° Interlock avec o'ring

Femmina Metrica sede 24° con o'ring serie S Interlock

DN	TUBO PIPE	SERIE SERIES	ROSCA THREAD	Referencia Part n°	€
3/4"	20	S	M30x2	**Z64204302012**	-
3/4"	25	S	M36x2	**Z64204362512**	-
1"	30	S	M42x2	**Z64204423016**	-
1"1/4	38	S	M52x2	**Z64204523820**	-
1"1/2	38	S	M52x2	**Z64204523824**	-

Hembras 90° Métricas cono 24° Interlock con junta tórica

Metric swivel female 24° seat serie S Interlock with o'ring (90° Elbow)

Coude 90° femelle Métrique 24° Interlock avec o'ring

Femmina Metrica 90° sede 24° con o'ring serie S Interlock

DN	TUBO PIPE	SERIE SERIES	ROSCA THREAD	Referencia Part n°	€
3/4"	20	S	M30x2	**Z64205302012**	-
3/4"	25	S	M36x2	**Z64205362512**	-
1"	30	S	M42x2	**Z64205423016**	-
1"1/4	38	S	M52x2	**Z64205523820**	-
1"1/2	38	S	M52x2	**Z64205523824**	-

Hembras 45° Métricas cono 24° Interlock con junta tórica

Metric swivel female 24° seat serie S Interlock with o'ring (45° Elbow)

Coude 45° femelle Métrique 24° Interlock avec o'ring

Femmina Metrica 45° sede 24° serie S Interlock

DN	TUBO PIPE	SERIE SERIES	ROSCA THREAD	Referencia Part n°	€
3/4"	20	S	M30x2	**Z64206302012**	-
3/4"	25	S	M36x2	**Z64206362512**	-
1"	30	S	M42x2	**Z64206423016**	-
1"1/4	38	S	M52x2	**Z64206523820**	-

Machos Métricos cono 24° Interlock

Metric male stud 24° cone serie S Interlock

Mâle Métrique cône 24° Interlock

Maschio Metrico sede 24° con o'ring serie S Interlock

DN	TUBO PIPE	SERIE SERIES	ROSCA THREAD	Referencia Part n°	€
3/4"	20	S	M30x2	**Z64203302012**	-
3/4"	25	S	M36x2	**Z64203362512**	-
1"	30	S	M42x2	**Z64203423016**	-
1"1/4	38	S	M52x2	**Z64203523820**	-

Hembras giratorias rectas ORFS Interlock

Interlock ORFS Swivel female straight

Femelle droite ORFS Interlock

Femmina diritta ORFS Interlock

DN	ROSCA THREAD	Referencia Part n°	€
3/4"	1"3/16-12h	**Z649011912**	-
1"	1"7/16-12h	**Z649012316**	-
1"1/4	1" 11/16-12h	**Z649012720**	-
1"1/2	2"-12h	**Z649013224**	-

Machos ORFS Interlock

Interlock ORFS Male

Mâle ORFS Interlock

Maschio ORFS Interlock

DN	ROSCA THREAD	Referencia Part n°	€
3/4"	1"3/16-12h	**Z649121912**	-
1"	1"7/16-12h	**Z649122316**	-
1"1/4	1" 11/16-12h	**Z649122720**	-
1"1/2	2"-12h	**Z649123224**	-

Hembras giratorias 90° ORFS Interlock

Interlock ORFS Swivel female (90° Elbow)

Coude 90° femelle ORFS Interlock

Femmina 90° ORFS Interlock

DN	ROSCA THREAD	Referencia Part n°	€
3/4"	1"3/16-12h	**Z649071912**	-
1"	1"7/16-12h	**Z649072316**	-
1" 1/4	1" 11/16-12h	**Z649072720**	-
1" 1/2	2"-12h	**Z649073224**	-

Hembras giratorias 45° ORFS Interlock

Interlock ORFS Swivel female (45° Elbow)

Coude 45° femelle ORFS Interlock

Femmina 45° ORFS Interlock

DN	ROSCA THREAD	Referencia Part n°	€
3/4"	1"3/16-12h	**Z649081912**	-
12	1"7/16-12h	**Z649082316**	-
1" 1/4	1" 11/16-12h	**Z649082720**	-
1" 1/2	2"-12h	**Z649083224**	-

Conexiones Interlock

Interlock series
Embouts Interlock
Serie Interlock

Bridas rectas SAE 3000 PSI Interlock

3000 PSI SAE Straight Flange Interlock / Code 61

Bride SAE droite série 3000 PSI Interlock

Flangia diritta SAE 3000 Interlock

DN	Ø	Referencia Part n°	€
3/4"	38.1	**Z641821212**	-
3/4"	44.5	**Z641821612**	-
1"	44.5	**Z641821616**	-
1"	50.8	**Z641822016**	-
1"1/4	50.8	**Z641822020**	-
1"1/4	60.3	**Z641822420**	-
1"1/2	60.3	**Z641822424**	-
1"1/2	71.4	**Z641823224**	-
2"	71.4	**Z641823232**	-

Bridas Rectas SAE 6000 PSI Interlock

6000 PSI SAE Straight Flange Interlock / Code 62

Bride SAE droite série 6000 PSI Interlock

Flangia diritta SAE 6000 Interlock

DN	Ø	Referencia Part n°	€
3/4"	41,3	**Z642821212**	-
3/4"	47,63	**Z642821612**	-
1"	47,63	**Z642821616**	-
1"	53,98	**Z642822016**	-
1"1/4	54	**Z642822020**	-
1"1/4	63,5	**Z642822420**	-
1"1/2	63,5	**Z642822424**	-
1"1/2	79,38	**Z642823224**	-
2"	79,38	**Z642823232**	-

Bridas 90° SAE 3000 PSI Interlock

3000 PSI SAE Flange Interlock (90° Elbow) / Code 61

Coude 90° bride SAE série 3000 PSI Interlock

Flangia 90° SAE 3000 Interlock

DN	Ø	Referencia Part n°	€
3/4"	38,1	**Z641831212**	-
3/4"	44,45	**Z641831612**	-
1"	44,45	**Z641831616**	-
1"	50,8	**Z641832016**	-
1"1/4	50,8	**Z641832020**	-
1"1/4	60,33	**Z641832420**	-
1"1/2	60.3	**Z641832424**	-
1"1/2	71.4	**Z641833224**	-
2"	71,4	**Z641833232**	-

Bridas 90° SAE 6000 PSI Interlock

6000 PSI SAE Flange Interlock (90° Elbow) / Code 62

Coude 90° bride SAE série 6000 PSI Interlock

Flangia 90° SAE 6000 Interlock

DN	Ø	Referencia Part n°	€
3/4"	41,3	**Z642831212**	-
3/4"	47,65	**Z642831612**	-
1"	47,65	**Z642831616**	-
1"	54	**Z642832016**	-
1"1/4	54	**Z642832020**	-
1"1/4	63,5	**Z642832420**	-
1"1/2	63,5	**Z642832424**	-
1"1/2	79,4	**Z642833224**	-
2"	79,4	**Z642833232**	-

Bridas 45° SAE 3000 PSI Interlock

3000 PSI SAE Flange Interlock (45° Elbow) / Code 61

Coude 45° bride SAE série 3000 PSI Interlock

Flangia 45° SAE 3000 Interlock

DN	Ø	Referencia Part n°	€
3/4"	38,1	**Z641841212**	-
3/4"	44,5	**Z641841612**	-
1"	44,5	**Z641841616**	-
1"	50,8	**Z641842016**	-
1"1/4	50,8	**Z641842020**	-
1"1/4	60,3	**Z641842420**	-
1"1/2	60.3	**Z641842424**	-
2"	71.4	**Z641843224**	-
2"	71.4	**Z641843232**	-

Bridas 45° SAE 6000 PSI Interlock

6000 PSI SAE Flange Interlock (45° Elbow) / Code 62

Coude 45° bride SAE série 6000 PSI Interlock

Flangia 45° SAE 6000 Interlock

DN	Ø	Referencia Part n°	€
3/4"	41,3	**Z642841212**	-
3/4"	47,6	**Z642841612**	-
1"	47,6	**Z642841616**	-
1"	54	**Z642842016**	-
1"1/4	54	**Z642842020**	-
1"1/4	63,5	**Z642842420**	-
1"1/2	63,5	**Z642842424**	-
1"1/2	79,4	**Z642843224**	-
2"	79,4	**Z642843232**	-

Casquillos para conexiones una sola pieza

Ferrules for one piece fittings
Jupes pour embouts pré-sertis
Boccole per raccordi compatti

Casquillos R1AT/R2AT/1SN/2SN /R16/2SC/R17 serie 43

Ferrules R1AT/R2AT/1SN/2SN/R16/2SC/R17 for one piece fittings 43 series
Jupes R1AT/R2AT/1SN/2SN/R16/2SC/R17 pour embous pré-sertis série 43
Boccole a pressare R1AT/R2AT/1SN/2SN/R16/2SN/R17 per raccordi compatti serie 43

DN	Referencia Part n°	€
1/4"	ZPFC221200400	-
5/16"	ZPFC221200500	-
3/8"	ZPFC221200600	-
1/2"	ZPFC221200800	-
5/8"	ZPFC221201000	-
3/4"	ZPFC221201200	-
1"	ZPFC221201600	-
1"1/4	ZPFC221202000	-
1"1/2	ZPFC221202400	-
2"	ZPFC221203200	-

Casquillos 3SP/4SP/R12/4SH serie standard no pelar

Ferrules 3SP/4SP/R12/4SH standard series non skive
Jupes 3SP/4SP/R12/4SH série standard sans dénudage
Boccole a pressare per 3SP/4SP/R12/4SH per Serie Standard senza spellatura

DN	Referencia Part n°	€
3/8"	ZPF222400600	-
1/2"	ZPF222400800	-
5/8"	ZPF222401000	-
3/4"	ZPF222401200	-
1"	ZPF222401600	-
1" 1/4	ZPF222402000	-
1" 1/2	ZPF222402400	-
2"	ZPF222403200	-

Casquillos R7, R8 y elastómero malla metálica una sola pieza

Ferrules R7, R8 and braid of steel wire for one piece fittings
Jupes R7, R8 et elastomère tresse métallique pour embouts pre-sertis
Boccole a pressare R7, R8 per raccordi compatti

DN	Referencia Part n°	€
3/16"	880120300	-
1/4"	880120400	-
5/16"	880120500	-
3/8"	880120600	-
1/2"	880120800	-
5/8"	880121000	-
3/4"	880121200	-
1"	880121600	-

Casquillos PTFE Liso una sola pieza

Ferrules smooth PTFE for one piece fittings
Jupes PTFE Lisse pour embouts pre-sertis
Boccole a pressare PTFE liscio per raccordi compatti

DN	Referencia Part n°	€
1/4"	880400400	-
5/16"	880400500	-
3/8"	880400600	-
1/2"	880400800	-
5/8"	880401000	-

Casquillos PTFE Corrugado una sola pieza

Ferrules convoluted PTFE for one piece fittings
Jupes PTFE Convoluté pour embouts pre-sertis
Boccole a pressare PTFE corrugato per raccordi compatti

DN	Referencia Part n°	€
1/4"	880410400	-
5/16"	880410500	-
3/8"	880410600	-
1/2"	880410800	-
5/8"	880411000	-
3/4"	880411200	-

Casquillos 1SC/1SN/2SC/R6

Ferrules 1SC/1SN/2SC/R6
Jupes 1SC/1SN/2SC/R6
Boccole a pressare per 1SC/1SN/2SC/R6 serie compatta

DN	Referencia Part n°	€
1/4"	ZSCC21120400	-
5/16"	ZSCC21120500	-
3/8"	ZSCC21120600	-
1/2"	ZSCC21120800	-
5/8"	ZSCC21121000	-
3/4"	ZSCC21121200	-
1"	ZSCC21121600	-

Casquillos R13/R15 para serie BW/BW+

Ferrules R13/R15 for fittings BW/BW+ series
Jupes R13/R15 pour embouts série BW/BW+
Boccole a pressare per R13/R15 per raccordi serie BW/BW+

DN	Referencia Part n°	€
1"1/4	ZAC690102000	-
1"1/2	ZAC690102400	-
2"	ZAC690103200	-

Conexiones una sola pieza Serie 43 R1AT/R2AT/1SN/2SN/R16/2SC/R17

One piece fittings 43 Series R1AT/R2AT/1SN/2SN/R16/2SC/R17
Embouts pré-sertis R1AT/R2AT/1SN/2SN/R16/2SC/R17 Série 43
Raccordi compatti R1AT/R2AT/1SN/2SN/R16/2SC/R17 Serie 43

Hembras giratorias rectas una sola pieza JIC 37° doble hexagonal

One piece double hexagonal JIC 37° Swivel female

Femelle pré-sertie JIC 37° double hexagonal

Femmina diritta compatta JIC 37° doppio esagono

DN	ROSCA THREAD	Referencia Part n°	€
1/4"	7/16" 20h UNF	**882420704**	-
1/4"	1/2" 20h UNF	**882420804**	-
1/4"	9/16" 18h UNF	**882420904**	-
3/8"	9/16" 18h UNF	**882420906**	-
5/16"	1/2" 20h UNF	**882420805**	-
3/8"	3/4" 16h UNF	**882421206**	-
1/2"	3/4" 16h UNF	**882421208**	-
5/8"	3/4" 16h UNF NEW	**882421210**	-
3/4"	3/4" 16h UNF	**882421212**	-
1/2"	7/8" 14h UNF	**882421408**	-
5/8"	7/8" 14h UNF	**882421410**	-
5/8"	1"1/16 12h UN	**882421710**	-
3/4"	1"1/16 12h UN	**882421712**	-
1"	1"1/16 12h UN	**882421716**	-
3/4"	1"5/16 12h UN	**882422112**	-
1"	1"5/16 12h UN	**882422116**	-
1"1/4	1"5/8 12h UN	**882422620**	-
1"1/2	1"7/8 12h UN	**882423024**	-
2"	2"1/2 12h UN	**882424032**	-

Hembras giratorias rectas una sola pieza JIC 37°

One piece JIC 37° Swivel female

Femelle pré-sertie JIC 37°

Femmina diritta compatta JIC 37°

DN	ROSCA THREAD	Referencia Part n°	€
1/4"	7/16" 20h UNF	**881420704**	-
1/4"	1/2" 20h UNF	**881420804**	-
5/16"	1/2" 20h UNF	**881420805**	-
1/4"	9/16" 18h UNF	**881420904**	-
5/16"	9/16" 18h UNF	**881420905**	-
3/8"	9/16" 18h UNF	**881420906**	-
3/8"	3/4" 16h UNF	**881421206**	-
1/2"	3/4" 16h UNF	**881421208**	-
1/2"	7/8" 14h UNF	**881421408**	-
5/8"	7/8" 14h UNF	**881421410**	-
1/2"	1"1/16 12h UN	**881421708**	-
5/8"	1"1/16 12h UN	**881421710**	-
3/4"	1"1/16 12h UN	**881421712**	-
1"	1"1/16 12h UN	**881421716**	-
3/4"	1"5/16 12h UN	**881422112**	-
1"	1"5/16 12h UN	**881422116**	-
5/8"	1"5/8 12h UN	**881422616**	-
1"1/4	1"5/8 12h UN	**881422620**	-
1"1/2	1"7/8 12h UN	**881423024**	-
2"	2"1/2 12h UN	**881424032**	-

Machos una sola pieza rosca JIC 37°

One piece JIC 37° male

Mâle pré-serti JIC 37°

Maschio compatto JIC sede 37°

DN	ROSCA THREAD	Referencia Part n°	€
1/4"	7/16" 20h UNF	**881400704**	-
3/8"	9/16" 18h UNF	**881400906**	-
1/2"	3/4" 16h UNF	**881401208**	-
3/8"	7/8" 14h UNF	**881401406**	-
1/2"	7/8" 14h UNF	**881401408**	-
5/8"	7/8" 14h UNF	**881401410**	-
5/8"	1"1/16 12h UN	**881401710**	-
3/4"	1"1/16 12h UN	**881401712**	-
1"	1"1/16 12h UN	**881401716**	-
3/4"	1"5/16 12h UN	**881402112**	-
1"	1"5/16 12h UN	**881402116**	-
1"1/4	1"5/8 12h UN	**881402620**	-
1"1/2	1"7/8 12h UN	**881403024**	-
2"	2"1/2 12h UN	**881404032**	-

Conexiones una sola pieza Serie 43 R1AT/R2AT/1SN/2SN/R16/2SC/R17

One piece fittings 43 Series R1AT/R2AT/1SN/2SN/R16/2SC/R17
Embouts pré-sertis R1AT/R2AT/1SN/2SN/R16/2SC/R17 Série 43
Raccordi compatti R1AT/R2AT/1SN/2SN/R16/2SC/R17 Serie 43

Hembras giratorias 90° una sola pieza JIC 37°

One piece JIC 37° Swivel female (90° Elbow)

Coude 90° femelle pré-sertie JIC 37°

Femmina 90° compatta JIC 37°

DN	ROSCA THREAD		Referencia Part n°	€
1/4"	7/16" 20h UNF		**881380704**	-
5/16"	1/2" 20h UNF		**881380805**	-
1/4"	9/16" 18h UNF		**881380904**	-
5/16"	9/16" 18h UNF	NEW	**881380905**	-
3/8"	9/16" 18h UNF		**881380906**	-
3/8"	3/4" 16h UNF		**881381206**	-
1/2"	3/4" 16h UNF		**881381208**	-
1/2"	7/8" 14h UNF		**881381408**	-
5/8"	7/8" 14h UNF		**881381410**	-
5/8"	1"1/16 12h UN	NEW	**881381710**	-
3/4"	1"1/16 12h UN		**881381712**	-
3/4"	1" 5/16 12h UN		**881382112**	-
1"	1"5/16 12h UN		**881382116**	-
1"1/4	1"5/8 12h UN		**881382620**	-
1"1/2	1"7/8 12h UN		**881383024**	-
2"	2"1/2 12h UN		**881384032**	-

Hembras giratorias 45° una sola pieza JIC 37°

One piece JIC 37° Swivel female (45° Elbow)

Coude 45° femelle pré-sertie JIC 37°

Femmina 45° compatta JIC 37°

DN	ROSCA THREAD	Referencia Part n°	€
1/4"	7/16" 20h UNF	**881390704**	-
1/4"	9/16" 18h UNF	**881390904**	-
3/8"	9/16" 18h UNF	**881390906**	-
3/8"	3/4" 16h UNF	**881391206**	-
1/2"	3/4" 16h UNF	**881391208**	-
1/2"	7/8" 14h UNF	**881391408**	-
5/8"	7/8" 14h UNF	**881391410**	-
3/4"	1"1/16 12h UN	**881391712**	-
1"	1"5/16 12h UN	**881392116**	-
1"1/4	1"5/8 12h UN	**881392620**	-
1"1/2	1"7/8 12h UN	**881393024**	-
2"	2"1/2 12h UN	**881394032**	-

Conexiones una sola pieza Serie 43 R1AT/R2AT/1SN/2SN/R16/2SC/R17

One piece fittings 43 Series R1AT/R2AT/1SN/2SN/R16/2SC/R17
Embouts pré-sertis R1AT/R2AT/1SN/2SN/R16/2SC/R17 Série 43
Raccordi compatti R1AT/R2AT/1SN/2SN/R16/2SC/R17 Serie 43

Hembras giratorias rectas una sola pieza ORFS doble hexagonal

One piece double hexagonal ORFS Swivel female

Femelle pré-sertie ORFS double hexagonal

Femmina diritta compatta ORFS doppio esagono

DN	ROSCA THREAD	Referencia Part n°	€
1/4"	9/16"-18h	**889000904**	-
1/4"	11/16"-16h	**889001104**	-
3/8"	11/16" 16h	**889001106**	-
3/8"	13/16"-16h	**889001306**	-
1/2"	13/16" 16h	**889001308**	-
1/2	1"-14h	**889001608**	-
5/8"	1"-14h	**889001610**	-
1/2"	1" 3/16-12h	**889001908**	-
5/8"	1"3/16-12h	**889001910**	-
3/4"	1"3/16-12h	**889001912**	-
3/4"	1" 7/16-12h	**889002312**	-
1"	1"7/16-12h	**889002316**	-
1"1/4	1"11/16-12h	**889002720**	-
1"1/2	2"-12h	**889003224**	-

Hembras giratorias 90° una sola pieza ORFS

One piece ORFS Swivel female (90° Elbow)

Coude 90° femelle pré-sertie ORFS

Femmina 90° compatta ORFS

DN	ROSCA THREAD	Referencia Part n°	€
1/4"	9/16"-18h	**889070904**	-
1/4"	11/16"-16h	**889071104**	-
3/8"	11/16"-16h	**889071106**	-
3/8"	13/16"-16"	**889071306**	-
1/2"	13/16"-16h	**889071308**	-
1/2"	1"-14h	**889071608**	-
5/8"	1"-14h	**889071610**	-
3/4"	1"3/16-12h	**889071912**	-
3/4"	1-7/16-12h	**889072312**	-
1"	1"7/16-12h	**889072316**	-
1"1/4	1"11/16-12h	**889072720**	-
1"1/2	2"-12h	**889073224**	-

Machos una sola pieza ORFS

One piece ORFS male

Mâle pré-serti ORFS

Maschio compatto ORFS

DN	ROSCA THREAD	Referencia Part n°	€
1/4"	9/16"-18h	**889120904**	-
3/8"	11/16"-16h	**889121106**	-
1/2"	13/16" -16h	**889121308**	-
5/8"	1"-14h	**889121610**	-
3/4"	1"3/16-12h	**889121912**	-
1"	1"7/16-12h	**889122316**	-
1"1/4	1"11/16 -12h	**889122720**	-
1"1/2	2" -12h	**889123224**	-

Hembras giratorias 45° una sola pieza ORFS

One piece ORFS Swivel female (45° Elbow)

Coude 45° femelle pré-sertie ORFS

Femmina 45° compatta ORFS

DN	ROSCA THREAD	Referencia Part n°	€
1/4"	9/16"-18h	**889080904**	-
1/4"	11/16"-16h	**889081104**	-
3/8"	11/16"-16h	**889081106**	-
3/8"	13/16"-16h	**889081306**	-
1/2"	13/16" 16h	**889081308**	-
1/2"	1"-14h	**889081608**	-
5/8"	1"-14h	**889081610**	-
3/4"	1"3/16-12h	**889081912**	-
3/4"	1" 7/16-12h	**889082312**	-
1"	1"7/16-12h	**889082316**	-
1"1/4	1"11/16-12h	**889082720**	-
1"1/2	2"-12h	**889083224**	-

Conexiones una sola pieza Serie 43 R1AT/R2AT/1SN/2SN/R16/2SC/R17

One piece fittings 43 Series R1AT/R2AT/1SN/2SN/R16/2SC/R17
Embouts pré-sertis R1AT/R2AT/1SN/2SN/R16/2SC/R17 Série 43
Raccordi compatti R1AT/R2AT/1SN/2SN/R16/2SC/R17 Serie 43

Hembras gir rectas una sola pieza rosca NPSM (60°) doble hex

One piece double hexagonal NPSM Swivel female 60° cone
Femelle pré-sertie NPSM cône 60° double hexagonal
Femmina diritta compatta NPSM sede 60° doppio esagono

DN	ROSCA THREAD	Referencia Part n°	€
1/4"	1/4" 18h NPSM	**883610404**	-
3/8"	3/8" 18h NPSM	**883610606**	-
1/2"	1/2" 14h NPSM	**883610808**	-
3/4"	3/4" 14h NPSM	**883611212**	-
1"	1" - 11 1/2 h NPSM	**883611616**	-

Hembras giratorias rectas una sola pieza rosca NPSM cono 60°

One piece NPSM Swivel female 60° cone
Femelle pré-sertie NPSM cône 60°
Femmina diritta compatta NPSM sede 60°

DN	ROSCA THREAD	Referencia Part n°	€
1/4"	1/4" 18h NPSM	**882610404**	-
3/8"	3/8" 18h NPSM	**882610606**	-
1/2"	1/2" 14h NPSM	**882610808**	-
3/4"	3/4" 14h NPSM	**882611212**	-
1"	1" - 11 1/2 h NPSM	**882611616**	-
1"1/4	1"1/4 - 11 1/2 h NPSM	**882612020**	-

Hembras giratorias 90° una sola pieza rosca NPSM cono 60°

One piece NPSM Swivel female 60° cone (90° Elbow)
Coude 90° femelle pré-sertie NPSM cône 60°
Femmina 90° compatta NPSM sede 60°

DN	ROSCA THREAD	Referencia Part n°	€
1/4"	1/4" 18h NPSM	**882620404**	-
3/8"	3/8" 18h NPSM	**882620606**	-
1/2"	1/2" 14h NPSM	**882620808**	-
3/4"	3/4" 14h NPSM	**882621212**	-
1"	1" - 11 1/2 h NPSM	**882621616**	-

Hembras giratorias 45° una sola pieza rosca NPSM cono 60°

One piece NPSM Swivel female 60° cone (45° Elbow)
Coude 45° femelle pré-sertie NPSM cône 60°
Femmina 45° compatta NPSM sede 60°

DN	ROSCA THREAD	Referencia Part n°	€
1/4"	1/4" 18h NPSM	**882630404**	-
3/8"	3/8" 18h NPSM	**882630606**	-
1/2"	1/2" 14h NPSM	**882630808**	-
3/4"	3/4" 14h NPSM	**882631212**	-
1"	1" - 11 1/2 h NPSM	**882631616**	-

Machos una sola pieza rosca cónica NPT

One piece NPT male pipe straight
Mâle pré-serti NPT
Maschio compatto conico NPT

DN	ROSCA THREAD	Referencia Part n°	€
1/4"	1/8" NPT	**881610204**	-
1/4"	1/4" NPT	**881610404**	-
3/8"	1/4" NPT	**881610406**	-
1/4"	3/8" NPT	**881610604**	-
3/8"	3/8" NPT	**881610606**	-
1/2"	3/8" NPT	**881610608**	-
1/4	1/2 NPT	**881610804**	-
3/8"	1/2" NPT	**881610806**	-
1/2"	1/2" NPT	**881610808**	-
5/8"	1/2" NPT	**881610810**	-
3/4	1/2 NPT	**881610812**	-
1/2"	3/4" NPT	**881611208**	-
5/8"	3/4" NPT	**881611210**	-
3/4"	3/4" NPT	**881611212**	-
3/4"	1" NPT	**881611612**	-
1"	1" NPT	**881611616**	-
1"1/4	1"1/4 NPT	**881612020**	-
1"1/2	1"1/2 NPT	**881612424**	-
2"	2" NPT	**881613232**	-

Machos giratorios una sola pieza rosca cónica NPT

One piece NPT swivel male
Mâle tournant pré-serti NPT
Maschio girevole compatto conico NPT

DN	ROSCA THREAD	Referencia Part n°	€
1/4"	1/4" NPT	**881650404**	-
3/8"	3/8" NPT	**881650606**	-
3/8"	1/2" NPT	**881650806**	-
1/2"	1/2" NPT	**881650808**	-
1/2"	3/4" NPT	**881651208**	-
3/4"	3/4" NPT	**881651212**	-
1"	1"NPT	**881651616**	-

Conexiones una sola pieza Serie 43 R1AT/R2AT/1SN/2SN/R16/2SC/R17

One piece fittings 43 Series R1AT/R2AT/1SN/2SN/R16/2SC/R17
Embouts pré-sertis R1AT/R2AT/1SN/2SN/R16/2SC/R17 Série 43
Raccordi compatti R1AT/R2AT/1SN/2SN/R16/2SC/R17 Serie 43

Bridas rectas una sola pieza SAE 3000 PSI

One piece 3000 PSI SAE Straight Flange / Code 61

Bride SAE droite pré-sertie série 3000 PSI

Flangia diritta compatta SAE 3000 PSI

DN	Ø	Referencia Part n°	€
1/2"	30.2	**881820808**	-
1/2"	38.1	**881821208**	-
3/4"	38.1	**881821212**	-
3/4"	44.5	**881821612**	-
1"	44.5	**881821616**	-
1"	50.8	**881822016**	-
1"1/4	50.8	**881822020**	-
1"1/4	60.3	**881822420**	-
1"1/2	60.3	**881822424**	-
1"1/2	71.4	**881823224**	-
2"	71.4	**881823232**	-

Bridas 90° una sola pieza SAE 3000 PSI

One piece 3000 PSI SAE Flange (90° Elbow)/ Code 61

Bride SAE coude 90° pré-sertie série 3000 PSI

Flangia 90° compatta SAE 3000 PSI

DN	Ø	Referencia Part n°	€
1/2"	30.2	**881830808**	-
1/2"	38.1	**881831208**	-
3/4"	38.1	**881831212**	-
3/4"	44.5	**881831612**	-
1"	44.5	**881831616**	-
1"	50.8	**881832016**	-
1"1/4	50.8	**881832020**	-
1"1/4	60.3	**881832420**	-
1"1/2	60.3	**881832424**	-
1"1/2	71.4	**881833224**	-
2"	71.4	**881833232**	-

Bridas 45° una sola pieza SAE 3000 PSI

One piece 3000 PSI SAE Flange (45° Elbow)/ Code 61

Bride SAE coude 45° pré-sertie série 3000 PSI

Flangia 45° compatta SAE 3000 PSI

DN	Ø	Referencia Part n°	€
1/2"	30.2	**881840808**	-
1/2"	38.1	**881841208**	-
3/4"	38.1	**881841212**	-
3/4"	44.5	**881841612**	-
1"	44.5	**881841616**	-
1"	50.8	**881842016**	-
1"1/4	50.8	**881842020**	-
1"1/4	60.3	**881842420**	-
1"1/2	60.3	**881842424**	-
2"	71.4	**881843232**	-

Bridas rectas una sola pieza SAE 6000 PSI

One piece 6000 PSI SAE Straight Flange / Code 62

Bride SAE droite pré-sertie série 6000 PSI

Flangia diritta compatta SAE 6000 PSI

DN	Ø	Referencia Part n°	€
1/2"	31.8	**882820808**	-
3/4"	41.3	**882821212**	-
1"	47.6	**882821616**	-
1"1/4	54	**882822020**	-
1"1/2	63.5	**882822424**	-
2"	79.4	**882823232**	-

Bridas 90° una sola pieza SAE 6000 PSI

One piece 6000 PSI SAE Flange (90° Elbow)/ Code 62

Bride SAE coude 90° pré-sertie série 6000 PSI

Flangia 90° compatta SAE 6000 PSI

DN	Ø	Referencia Part n°	€
1/2"	31.8	**882830808**	-
3/4"	41.3	**882831212**	-
1"	47.6	**882831616**	-
1"1/4	54	**882832020**	-
1"1/2	63.5	**882832424**	-
2"	79.4	**882833232**	-

Bridas 45° una sola pieza SAE 6000 PSI

One piece 6000 PSI SAE Flange (45° Elbow)/ Code 62

Bride SAE coude 45° pré-sertie série 6000 PSI

Flangia 45° compatta SAE 6000 PSI

DN	Ø	Referencia Part n°	€
1/2"	31.8	**882840808**	-
3/4"	41.3	**882841212**	-
1"	47.6	**882841616**	-
1"1/4	54	**882842020**	-
1"1/2	63.5	**882842424**	-
2"	79.4	**882843232**	-

Conexiones una sola pieza Serie 43 R1AT/R2AT/1SN/2SN/R16/2SC/R17

One piece fittings 43 Series R1AT/R2AT/1SN/2SN/R16/2SC/R17
Embouts pré-sertis R1AT/R2AT/1SN/2SN/R16/2SC/R17 Série 43
Raccordi compatti R1AT/R2AT/1SN/2SN/R16/2SC/R17 Serie 43

Hembras gir rectas una sola pieza rosca Métrica cono 24° - DKO

One piece Metric female cone 24°

Femelle pré-sertie Métrique cône 24°

Femmina diritta compatta Metrica sede 24°

DN	TUBO PIPE	SERIE SERIES	ROSCA THREAD	Referencia Part n°	€
1/4"	6	L	M12x1.5	**88804120604**	-
1/4"	8	L	M14x1.5	**88804140804**	-
1/4"	10	L	M16x1.5	**88804161004**	-
3/8"	10	L	M16x1.5	**88804161006**	-
5/16"	10	L	M16x1.5	**88804161005**	-
1/4"	12	L	M18x1.5	**88804181204**	-
3/8"	12	L	M18x1.5	**88804181206**	-
1/2"	12	L	M18x1.5	**88804181208**	-
3/8"	15	L	M22x1.5	**88804221506**	-
1/2"	15	L	M22x1.5	**88804221508**	-
1/2"	18	L	M26x1.5	**88804261808**	-
5/8"	18	L	M26x1.5	**88804261810**	-
3/4"	18	L	M26x1.5	**88804261812**	-
3/4"	22	L	M30x2	**88804302212**	-
1"	28	L	M36x2	**88804362816**	-
1"1/4	35	L	M45x2	**88804453520**	-
1"1/4	42	L	M52x2	**88804524220**	-
1"1/2	42	L	M52x2	**88804524224**	-
1/4"	8	S	M16x1.5	**88804160804**	-
1/4"	10	S	M18x1.5	**88804181004**	-
1/4"	12	S	M20x1.5	**88804201204**	-
3/8"	12	S	M20x1.5	**88804201206**	-
1/2"	12	S	M20x1.5	**88804201208**	-
3/8"	16	S	M24x1,5	**88804241606**	-
1/2"	16	S	M24x1.5	**88804241608**	-
5/8"	20	S	M30x2	**88804302010**	-
3/4"	20	S	M30x2	**88804302012**	-
3/4"	25	S	M36x2	**88804362512**	-
1"	25	S	M36x2	**88804362516**	-
1"	30	S	M42x2	**88804423016**	-
1"1/4	38	S	M52x2	**88804523820**	-

Machos una sola pieza rosca Métrica cono 24°

One piece Metric male cone 24°

Mâle pré-serti Métrique cône 24°

Maschio compatto Metrico sede 24°

DN	TUBO PIPE	SERIE	ROSCA THREAD	Referencia Part n°	€
1/4"	6	L	M12x1.5	**88203120604**	-
1/4"	8	L	M14x1.5	**88203140804**	-
5/16"	10	L	M16x1.5	**88203161005**	-
3/8"	10	L	M16x1.5	**88203161006**	-
3/8"	12	L	M18x1.5	**88203181206**	-
1/2"	15	L	M22x1.5	**88203221508**	-
1/2"	18	L	M26x1.5	**88203261808**	-
5/8"	18	L	M26x1.5	**88203261810**	-
3/4"	22	L	M30x2	**88203302212**	-
1"	28	L	M36x2	**88203362816**	-
1"1/4	35	L	M45x2	**88203453520**	-
1"1/2	42	L	M52x2	**88203524224**	-
1/4"	8	S	M16x1.5	**88203160804**	-
1/4"	10	S	M18x1.5	**88203181004**	-
3/8"	12	S	M20x1.5	**88203201206**	-
1/2"	16	S	M24x1.5	**88203241608**	-
5/8"	20	S	M30x2	**88203302010**	-
3/4"	20	S	M30x2	**88203302012**	-
3/4"	25	S	M36x2	**88203362512**	-
1"	25	S	M36x2	**88203362516**	-
1"	30	S	M42x2	**88203423016**	-
1"1/4	38	S	M52x2	**88203523820**	-

Conexiones una sola pieza Serie 43 R1AT/R2AT/1SN/2SN/R16/2SC/R17

One piece fittings 43 Series R1AT/R2AT/1SN/2SN/R16/2SC/R17
Embouts pré-sertis R1AT/R2AT/1SN/2SN/R16/2SC/R17 Série 43
Raccordi compatti R1AT/R2AT/1SN/2SN/R16/2SC/R17 Serie 43

Hembras gir 90° una sola pieza Métricas cono 24° - DKO 90°

One piece Metric female cone 24° (90° Elbow)

Coude 90° femelle pré-sertie Métrique cône 24°

Femmina 90° compatta Metrica sede 24°

DN	TUBO PIPE	SERIE SERIES	ROSCA THREAD	Referencia Part n°	€
1/4"	6	L	M12x1.5	**88305120604**	-
1/4"	8	L	M14x1.5	**88305140804**	-
1/4"	10	L	M16x1.5	**88305161004**	-
5/16"	10	L	M16x1.5	**88305161005**	-
3/8"	10	L	M16x1.5	**88305161006**	-
1/4"	12	L	M18x1.5	**88305181204**	-
3/8"	12	L	M18x1.5	**88305181206**	-
1/2"	15	L	M22x1.5	**88305221508**	-
5/8"	18	L	M26x1.5	**88305261810**	-
3/4"	22	L	M30x2	**88305302212**	-
1"	28	L	M36x2	**88305362816**	-
1"1/4	35	L	M45x2	**88305453520**	-
1"1/2	42	L	M52x2	**88305524224**	-
1/4"	8	S	M16x1.5	**88305160804**	-
1/4"	10	S	M18x1.5	**88305181004**	-
1/4"	12	S	M20x1.5	**88305201204**	-
5/16"	12	S	M20x1.5	**88305201205**	-
3/8"	12	S	M20x1.5	**88305201206**	-
1/2"	16	S	M24x1.5	**88305241608**	-
5/8"	20	S	M30x2	**88305302010**	-
3/4"	20	S	M30x2	**88305302012**	-
3/4"	25	S	M36x2	**88305362512**	-
1"	25	S	M36x2	**88305362516**	-
1"	30	S	M42x2	**88305423016**	-
1"1/4	38	S	M52x2	**88305523820**	-

Hembras gir 45° una sola pieza Métricas cono 24° - DKO 45°

One piece Metric female cone 24° (45° Elbow)

Coude 45° femelle pré-sertie Métrique cône 24°

Femmina 45° compatta Metrica sede 24°

DN	TUBO PIPE	SERIE	ROSCA THREAD	Referencia Part n°	€
1/4"	6	L	M12x1.5	**88306120604**	-
1/4"	8	L	M14x1.5	**88306140804**	-
1/4"	10	L	M16x1.5	**88306161004**	-
5/16"	10	L	M16x1.5	**88306161005**	-
3/8"	10	L	M16x1.5	**88306161006**	-
3/8"	12	L	M18x1.5	**88306181206**	-
3/8"	15	L	M22x1.5 NEW	**88306221506**	-
1/2"	15	L	M22x1.5	**88306221508**	-
1/2"	18	L	M26x1.5	**88306261808**	-
5/8"	18	L	M26x1.5	**88306261810**	-
3/4"	22	L	M30x2	**88306302212**	-
1"	28	L	M36x2	**88306362816**	-
1"1/4	35	L	M45x2	**88306453520**	-
1"1/2	42	L	M52x2	**88306524224**	-
1/4"	8	S	M16x1.5	**88306160804**	-
1/4"	10	S	M18x1.5	**88306181004**	-
1/4"	12	S	M20x1.5	**88306201204**	-
3/8"	10	S	M18x1.5	**88306181006**	-
3/8"	12	S	M20x1.5	**88306201206**	-
3/8"	14	S	M22x1.5	**88306221406**	-
1/2"	16	S	M24x1.5	**88306241608**	-
5/8"	20	S	M30x2	**88306302010**	-
3/4"	20	S	M30x2	**88306302012**	-
3/4"	25	S	M36x2	**88306362512**	-
1"	25	S	M36x2	**88306362516**	-
1"	30	S	M42x2	**88306423016**	-
1"1/4	38	S	M52x2	**88306523820**	-

Conexiones una sola pieza Serie 43 R1AT/R2AT/1SN/2SN/R16/2SC/R17

One piece fittings 43 Series R1AT/R2AT/1SN/2SN/R16/2SC/R17
Embouts pré-sertis R1AT/R2AT/1SN/2SN/R16/2SC/R17 Série 43
Raccordi compatti R1AT/R2AT/1SN/2SN/R16/2SC/R17 Serie 43

Hembras giratorias rectas una sola pieza rosca BSP (60°) doble hex

One piece double hexagonal BSP female 60° cone

Femelle pré-sertie BSP cône 60° double hexagonal

Femmina diritta compatta BSP sede 60° doppio esagono

DN	ROSCA THREAD	Referencia Part n°	€
1/4"	1/4" BSP	**884000404**	-
5/16"	3/8" BSP	**884000605**	-
3/8"	3/8" BSP	**884000606**	-
1/2"	1/2" BSP	**884000808**	-
3/4"	3/4" BSP	**884001212**	-
1"	1" BSP	**884001616**	-
1"1/4	1"1/4 BSP	**884002020**	-
1"1/2	1"1/2 BSP	**884002424**	-
2"	2" BSP	**884003232**	-

Hembras giratorias rectas una sola pieza rosca BSP cono 60°

One piece BSP female 60° cone

Femelle pré-sertie BSP cône 60°

Femmina diritta compatta BSP sede 60°

DN	ROSCA THREAD	Referencia Part n°	€
1/4"	1/4" BSP	**881000404**	-
1/4"	3/8" BSP	**881000604**	-
5/16"	3/8" BSP	**881000605**	-
3/8"	3/8" BSP	**881000606**	-
1/2"	3/8" BSP	**881000608**	-
3/8"	1/2" BSP	**881000806**	-
1/2"	1/2" BSP	**881000808**	-
5/8"	1/2" BSP	**881000810**	-
5/8"	5/8" BSP	**881001010**	-
1/2"	3/4" BSP	**881001208**	-
5/8"	3/4" BSP	**881001210**	-
3/4"	3/4" BSP	**881001212**	-
3/4"	1" BSP	**881001612**	-
1"	1" BSP	**881001616**	-
1"1/4	1"1/4 BSP	**881002020**	-
1"1/2	1"1/2 BSP	**881002424**	-
2"	2" BSP	**881003232**	-

Hembras giratorias rectas compactas rosca BSP asiento plano

One piece BSP female flat seat

Femelle pré-sertie BSP fond plat

Femmina diritta compatta BSP sede piana

DN	ROSCA THREAD	Referencia Part n°	€
1/4"	1/4" BSP	**882000404**	-
3/8"	3/8" BSP	**882000606**	-
1/2"	1/2" BSP	**882000808**	-
3/4"	3/4" BSP	**882001212**	-
1"	1" BSP	**882001616**	-

Hembras giratorias 90° una sola pieza rosca BSP cono 60°

One piece BSP female cone 60° (90° Elbow)

Coude 90° femelle pré-sertie BSP cône 60°

Femmina 90° compatta BSP sede 60°

DN	ROSCA THREAD	Referencia Part n°	€
1/4"	1/4" BSP	**881070404**	-
1/4"	3/8" BSP	**881070604**	-
3/8"	3/8" BSP	**881070606**	-
1/2"	3/8" BSP	**881070608**	-
3/8"	1/2" BSP	**881070806**	-
1/2"	1/2" BSP	**881070808**	-
5/8"	5/8" BSP	**881071010**	-
5/8"	3/4" BSP	**881071210**	-
3/4"	3/4" BSP	**881071212**	-
3/4"	1" BSP	**881071612**	-
1"	1" BSP	**881071616**	-
1"1/4	1"1/4 BSP	**881072020**	-
1"1/2	1"1/2 BSP	**881072424**	-
2"	2" BSP	**881073232**	-

Hembras giratorias 45° una sola pieza rosca BSP cono 60°

One piece BSP female cone 60° (45° Elbow)

Coude 45° femelle pré-sertie BSP cône 60°

Femmina 45° compatta BSP sede 60°

DN	ROSCA THREAD	Referencia Part n°	€
1/4"	1/4" BSP	**881080404**	-
3/8"	3/8" BSP	**881080606**	-
3/8"	1/2" BSP	**881080806**	-
1/2"	1/2" BSP	**881080808**	-
3/4"	3/4" BSP	**881081212**	-
1"	1" BSP	**881081616**	-
1"1/4	1"1/4 BSP	**881082020**	-
1"1/2	1"1/2 BSP	**881082424**	-
2"	2" BSP	**881083232**	-

Machos una sola pieza rosca cilíndrica BSP cono 60°

One piece BSP male 60° cone

Mâle pré-serti BSP cône 60°

Maschio compatto cilindrico BSP sede 60°

DN	ROSCA THREAD	Referencia Part n°	€
1/4"	1/4" BSP	**881120404**	-
3/8"	3/8" BSP	**881120606**	-
3/8"	1/2" BSP	**881120806**	-
1/2"	1/2" BSP	**881120808**	-
5/8"	3/4" BSP NEW	**881121210**	-
3/4"	3/4" BSP	**881121212**	-
3/4"	1" BSP	**881121612**	-
1"	1" BSP	**881121616**	-
1"1/4	1"1/4 BSP	**881122020**	-
1"1/2	1"1/2 BSP	**881122424**	-
2"	2" BSP	**881123232**	-

Conexiones una sola pieza Serie BWS 3SP/4SP/R12/4SH No Pelar

One piece fittings BWS Series 3SP/4SP/R12/4SH No Skive
Embouts pré-sertis Série BWS 3SP/4SP/R12/4SH Sans dénuder
Raccordi Compatti Serie BWS 3SP/4SP/R12/4SH senza spellatura

R13 & R15 Ø 3/4" - 1"

Hembras giratorias rectas una sola pieza JIC 37° doble hexagonal

One piece double hexagonal JIC 37° Swivel female

Femelle pré-sertie JIC 37° double hexagonal

Femmina diritta JIC 37° doppio esagono

DN	ROSCA THREAD	Referencia Part n°	€
3/8"	9/16" 18h UNF	**Z582420906**	-
1/2"	3/4" 16h UNF	**Z582421208**	-
1/2"	7/8" 14h UNF	**Z582421408**	-
5/8"	7/8" 14h UNF	**Z582421410**	-
3/4"	1"1/16 12h UN	**Z582421712**	-
1"	1"1/16 12h UN	**Z582421716**	-
1"	1"5/16 12h UN	**Z582422116**	-
1"1/4	1"5/8 12h UN	**Z582422620**	-
1"1/2	1"7/8 12 UN	**Z582423024**	-
2"	2"1/2 12h UN	**Z582424032**	-

Hembras giratorias 90° una sola pieza JIC 37°

One piece JIC 37° Swivel female (90° Elbow)

Coude 90° femelle pré-sertie JIC 37°

Femmina 90° compatta JIC 37°

DN	ROSCA THREAD	Referencia Part n°	€
3/8"	9/16" 18h UNF	**Z581380906**	-
1/2"	3/4" 16h UNF	**Z581381208**	-
5/8"	7/8" 14h UNF	**Z581381410**	-
3/4"	1"1/16 12h UN	**Z581381712**	-
1"	1"5/16 12h UN	**Z581382116**	-
1"1/4	1"5/8 12h UN	**Z581382620**	-
1"1/2	1"7/8 12 UN	**Z581383024**	-
2"	2"1/2 12h UN	**Z581384032**	-

Machos una sola pieza rosca JIC 37°

One piece JIC 37° male

Mâle pré-serti JIC 37°

Maschio compatto JIC sede 37°

DN	ROSCA THREAD	Referencia Part n°	€
3/8"	9/16" 18h UNF	**Z581400906**	-
1/2"	3/4" 16h UNF	**Z581401208**	-
5/8"	7/8" 14h UNF	**Z581401410**	-
3/4"	1"1/16 12h UN	**Z581401712**	-
1"	1"5/16 12h UN	**Z581402116**	-
1"1/4	1"5/8 12h UN	**Z581402620**	-
1"1/2	1"7/8 12 UN	**Z581403024**	-
2"	2"1/2 12h UN	**Z581404032**	-

Hembras giratorias rectas una sola pieza JIC 37°

One piece JIC 37° Swivel female

Femelle pré-sertie JIC 37°

Femmina diritta compatta JIC 37°

DN	ROSCA THREAD	Referencia Part n°	€
3/8"	9/16" 18h UNF	**Z581420906**	-
1/2"	3/4" 16h UNF	**Z581421208**	-
5/8"	7/8" 14h UNF	**Z581421410**	-
3/4"	1"1/16 12h UN	**Z581421712**	-
1"	1"5/16 12h UN	**Z581422116**	-
1"	1"5/8 12h UN	**Z581422616**	-
1"1/4	1"5/8 12h UN	**Z581422620**	-
1"1/2	1"7/8 12 UN	**Z581423024**	-
2"	2"1/2 12h UN	**Z581424032**	-

Hembras giratorias 45° una sola pieza JIC 37°

One piece JIC 37° Swivel female (45° Elbow)

Coude 45° femelle pré-sertie JIC 37°

Femmina 45° compatta JIC 37°

DN	ROSCA THREAD	Referencia Part n°	€
3/8"	9/16" 18h UNF	**Z581390906**	-
1/2"	3/4" 16h UNF	**Z581391208**	-
5/8"	7/8" 14h UNF	**Z581391410**	-
3/4"	1"1/16 12h UN	**Z581391712**	-
1"	1"5/16 12h UN	**Z581392116**	-
1"1/4	1"5/8 12h UN	**Z581392620**	-
1"1/2	1"7/8 12 UN	**Z581393024**	-
2"	2"1/2 12h UN	**Z581394032**	-

Conexiones una sola pieza Serie BWS 3SP/4SP/R12/4SH No Pelar

One piece fittings BWS Series 3SP/4SP/R12/4SH No Skive
Embouts pré-sertis Série BWS 3SP/4SP/R12/4SH Sans dénuder
Raccordi Compatti Serie BWS 3SP/4SP/R12/4SH senza spellatura

R13 & R15 Ø 3/4" - 1"

Hembras giratorias rectas una sola pieza ORFS doble hexagonal

One piece double hexagonal ORFS Swivel female

Femelle pré-sertie ORFS double hexagonal

Femmina diritta compatta ORFS doppio esagono

DN	ROSCA THREAD	Referencia Part n°	€
3/8"	11/16" 16h UN	**Z589001106**	-
1/2"	13/16" 16h UN	**Z589001308**	-
5/8"	1" 14h UNS	**Z589001610**	-
3/4"	1"3/16 12h UN	**Z589001912**	-
1"	1"7/16 12h UN	**Z589002316**	-
1"1/4	1"11/16 12h UN	**Z589002720**	-
1"1/2	2" 12h UN	**Z589003224**	-

Machos una sola pieza ORFS

One piece ORFS male

Mâle pré-serti ORFS

Maschio compatto ORFS

DN	ROSCA THREAD	Referencia Part n°	€
3/8"	11/16" 16h UN	**Z589121106**	-
1/2"	13/16" 16h UN	**Z589121308**	-
5/8"	1" 14h UNS	**Z589121610**	-
3/4"	1"3/16 12h UN	**Z589121912**	-
1"	1"7/16 12h UN	**Z589122316**	-
1"1/4	1"11/16 12h UN	**Z589122720**	-
1"1/2	2" 12h UN	**Z589123224**	-

Hembras giratorias 90° una sola pieza ORFS

One piece ORFS Swivel female (90° Elbow)

Coude 90° femelle pré-sertie ORFS

Femmina 90° compatta ORFS

DN	ROSCA THREAD	Referencia Part n°	€
3/8"	11/16" 16h UN	**Z589071106**	-
1/2"	13/16" 16h UN	**Z589071308**	-
5/8"	1" 14h UNS	**Z589071610**	-
3/4"	1"3/16 12h UN	**Z589071912**	-
1"	1"7/16 12h UN	**Z589072316**	-
1"1/4	1"11/16 12h UN	**Z589072720**	-
1"1/2	2" 12h UN	**Z589073224**	-

Hembras giratorias 45° una sola pieza ORFS

One piece ORFS Swivel female (45° Elbow)

Coude 45° femelle pré-sertie ORFS

Femmina 45° compatta ORFS

DN	ROSCA THREAD	Referencia Part n°	€
3/8"	11/16" 16h UN	**Z589081106**	-
1/2"	13/16" 16h UN	**Z589081308**	-
5/8"	1" 14h UNS	**Z589081610**	-
3/4"	1"3/16 12h UN	**Z589081912**	-
1"	1"7/16 12h UN	**Z589082316**	-
1"1/4	1"11/16 12h UN	**Z589082720**	-
1"1/2	2" 12h UN	**Z589083224**	-

Conexiones una sola pieza Serie BWS 3SP/4SP/R12/4SH No Pelar

One piece fittings BWS Series 3SP/4SP/R12/4SH No Skive
Embouts pré-sertis Série BWS 3SP/4SP/R12/4SH Sans dénuder
Raccordi Compatti Serie BWS 3SP/4SP/R12/4SH senza spellatura

R13 & R15 Ø 3/4" - 1"

Hembras giratorias rectas una sola pieza NPSM (60°) doble hex

One piece double hexagonal NPSM Swivel female 60° cone
Femelle pré-sertie NPSM cône 60° double hexagonal
Femmina diritta compatta NPSM sede 60° doppio esagono

DN	ROSCA THREAD	Referencia Part n°	€
3/8"	3/8" NPSM	**Z583610606**	-
1/2"	1/2" NPSM	**Z583610808**	-
3/4"	3/4" NPSM	**Z583611212**	-
1"	1" NPSM	**Z583611616**	-

Hembras giratorias 90° una sola pieza rosca NPSM cono 60°

One piece NPSM Swivel female 60° cone (90° Elbow)
Coude 90° femelle pré-sertie NPSM cône 60°
Femmina 90° compatta NPSM sede 60°

DN	ROSCA THREAD	Referencia Part n°	€
3/8"	3/8" NPSM	**Z582620606**	-
1/2"	1/2" NPSM	**Z582620808**	-
3/4"	3/4" NPSM	**Z582621212**	-
1"	1" NPSM	**Z582621616**	-

Machos una sola pieza rosca cónica NPT

One piece NPT male pipe straight
Mâle pré-serti NPT
Maschio compatto conico NPT

DN	ROSCA THREAD	Referencia Part n°	€
3/8"	3/8" NPT	**Z581610606**	-
1/2"	1/2" NPT	**Z581610808**	-
3/4"	3/4" NPT	**Z581611212**	-
1"	1" NPT	**Z581611616**	-
1"1/4	1"1/4 NPT	**Z581612020**	-
1"1/2	1"1/2 NPT	**Z581612424**	-
2"	2" NPT	**Z581613232**	-

Hembras giratorias rectas una sola pieza NPSM cono 60°

One piece NPSM Swivel female 60° cone
Femelle pré-sertie NPSM cône 60°
Femmina diritta compatta NPSM sede 60°

DN	ROSCA THREAD	Referencia Part n°	€
3/8"	3/8" NPSM	**Z582610606**	-
1/2"	1/2" NPSM	**Z582610808**	-
3/4"	3/4" NPSM	**Z582611212**	-
1"	1" NPSM	**Z582611616**	-
1"1/4	1"1/4 NPSM	**Z582612020**	-
1"1/2	1"1/2 NPSM	**Z582612424**	-
2"	2" NPSM	**Z582613232**	-

Hembras giratorias 45° una sola pieza rosca NPSM cono 60°

One piece NPSM Swivel female 60° cone (45° Elbow)
Coude 45° femelle pré-sertie NPSM cône 60°
Femmina 45° compatta NPSM sede 60°

DN	ROSCA THREAD	Referencia Part n°	€
3/8"	3/8" NPSM	**Z582630606**	-
1/2"	1/2" NPSM	**Z582630808**	-
3/4"	3/4" NPSM	**Z582631212**	-
1"	1" NPSM	**Z582631616**	-

Machos giratorios una sola pieza rosca cónica NPT

One piece NPT swivel male
Mâle tournant pré-serti NPT
Maschio girevole compatto conico NPT

DN	ROSCA THREAD	Referencia Part n°	€
3/8"	3/8" NPT	**Z581650606**	-
1/2"	1/2" NPT	**Z581650808**	-
3/4"	3/4" NPT	**Z581651212**	-
1"	1" NPT	**Z581651616**	-

Conexiones una sola pieza Serie BWS 3SP/4SP/R12/4SH No Pelar

One piece fittings BWS Series 3SP/4SP/R12/4SH No Skive
Embouts pré-sertis Série BWS 3SP/4SP/R12/4SH Sans dénuder
Raccordi Compatti Serie BWS 3SP/4SP/R12/4SH senza spellatura

R13 & R15 Ø 3/4" - 1"

Bridas rectas una sola pieza SAE 3000 PSI

One piece 3000 PSI SAE Straight Flange / Code 61

Bride SAE droite pré-sertie série 3000 PSI

Flangia diritta compatta SAE 3000 PSI

DN	Ø	Referencia Part n°	€
1/2"	30.2	**Z581820808**	-
5/8"	38.1	**Z581821210**	-
3/4"	38.1	**Z581821212**	-
1"	38.1	**Z581821612**	-
1"	44.5	**Z581821616**	-
1"1/4	50.8	**Z581822020**	-
1"1/2	60.3	**Z581822424**	-
2"	71.4	**Z581823232**	-

Bridas 90° una sola pieza SAE 3000 PSI

One piece 3000 PSI SAE Flange (90° Elbow)/ Code 61

Bride SAE coude 90° pré-sertie série 3000 PSI

Flangia 90° compatta SAE 3000 PSI

DN	Ø		Referencia Part n°	€
1/2"	30.2		**Z581830808**	-
5/8"	38.1		**Z581831210**	-
3/4"	38.1		**Z581831212**	-
3/4"	44.5	NEW	**Z581831612**	-
1"	44.5		**Z581831616**	-
1"1/4	50.8		**Z581832020**	-
1"1/4	60.3		**Z581832420**	-
1"1/2	60.3		**Z581832424**	-
2"	71.4		**Z581833232**	-

Bridas 45° una sola pieza SAE 3000 PSI

One piece 3000 PSI SAE Flange (45° Elbow)/ Code 61

Bride SAE coude 45° pré-sertie série 3000 PSI

Flangia 45° compatta SAE 3000 PSI

DN	Ø	Referencia Part n°	€
1/2"	30.2	**Z581840808**	-
5/8"	38.1	**Z581841210**	-
3/4"	38.1	**Z581841212**	-
1"	44.5	**Z581841616**	-
1"1/4	50.8	**Z581842020**	-
1"1/2	60.3	**Z581842424**	-
2"	71.4	**Z581843232**	-

Bridas rectas una sola pieza SAE 6000 PSI

One piece 6000 PSI SAE Straight Flange / Code 62

Bride SAE droite pré-sertie série 6000 PSI

Flangia diritta compatta SAE 6000 PSI

DN	Ø		Referencia Part n°	€
1/2"	31.8		**Z582820808**	-
5/8"	41.3		**Z582821210**	-
3/4"	41.3		**Z582821212**	-
1"	47.6		**Z582821616**	-
1"	54.0	NEW	**Z582822016**	-
1"1/4	54.0		**Z582822020**	-
1"1/2	63.5		**Z582822424**	-
2"	79.4		**Z582823232**	-

Bridas 90° una sola pieza SAE 6000 PSI

One piece 6000 PSI SAE Flange (90° Elbow)/ Code 62

Bride SAE coude 90° pré-sertie série 6000 PSI

Flangia 90° compatta SAE 6000 PSI

DN	Ø		Referencia Part n°	€
1/2"	31.8		**Z582830808**	-
5/8"	41.3		**Z582831210**	-
3/4"	41.3		**Z582831212**	-
1"	41.3	NEW	**Z582831612**	-
1"	47.6		**Z582831616**	-
1"1/4	47.6	NEW	**Z582832016**	-
1"1/4	54.0		**Z582832020**	-
1"1/4	63.5		**Z582832420**	-
1"1/2	63.5		**Z582832424**	-
2"	79.4		**Z582833232**	-

Bridas 45° una sola pieza SAE 6000 PSI

One piece 6000 PSI SAE Flange (45° Elbow)/ Code 62

Bride SAE coude 45° pré-sertie série 6000 PSI

Flangia 45° compatta SAE 6000 PSI

DN	Ø	Referencia Part n°	€
1/2"	31.8	**Z582840808**	-
5/8"	41.3	**Z582841210**	-
3/4"	41.3	**Z582841212**	-
1"	47.6	**Z582841616**	-
1"1/4	54.0	**Z582842020**	-
1"1/2	63.5	**Z582842424**	-
2"	79.4	**Z582843232**	-

Conexiones una sola pieza Serie BWS 3SP/4SP/R12/4SH No Pelar

One piece fittings BWS Series 3SP/4SP/R12/4SH No Skive
Embouts pré-sertis Série BWS 3SP/4SP/R12/4SH Sans dénuder
Raccordi Compatti Serie BWS 3SP/4SP/R12/4SH senza spellatura

R13 & R15 Ø 3/4" - 1"

Hembras gir rectas una sola pieza rosca Métrica cono 24° - DKO

One piece Metric female cone 24°

Femelle pré-sertie Métrique cône 24°

Femmina diritta compatta Metrica sede 24°

DN	TUBO PIPE	SERIE SERIES	ROSCA THREAD		Referencia Part n°	€
3/8"	10	L	M16x1.5		**Z58804161006**	-
3/8"	12	L	M18x1.5		**Z58804181206**	-
3/8"	15	L	M22x1.5		**Z58804221506**	-
1/2"	15	L	M22x1.5		**Z58804221508**	-
1/2"	18	L	M26x1.5		**Z58804261808**	-
3/4"	18	L	M26x1.5		**Z58804261812**	-
5/8"	18	L	M26x1.5		**Z58804261810**	-
3/4"	22	L	M30x2		**Z58804302212**	-
1"	28	L	M36x2		**Z58804362816**	-
1"1/4	35	L	M45x2		**Z58804453520**	-
1"1/2	42	L	M52x2		**Z58804524224**	-
3/8"	12	S	M20x1.5		**Z58804201206**	-
1/2"	16	S	M24x1.5		**Z58804241608**	-
5/8"	20	S	M30x2		**Z58804302010**	-
3/4"	20	S	M30x2		**Z58804302012**	-
5/8"	25	S	M36x2	NEW	**Z58804362510**	-
3/4"	25	S	M36x2		**Z58804362512**	-
1"	25	S	M36x2	NEW	**Z58804362516**	-
1"	30	S	M42x2		**Z58804423016**	-
1"1/4	38	S	M45x2		**Z58804523820**	-

Hembras gir 90° una sola pieza Métricas cono 24° - DKO 90°

One piece Metric female cone 24° (90° Elbow)

Coude 90° femelle pré-sertie Métrique cône 24°

Femmina 90° compatta Metrica sede 24°

DN	TUBO PIPE	ROSCA THREAD	SERIE SERIES		Referencia Part n°	€
3/8"	10	M16x1.5	L		**Z58305161006**	-
3/8"	12	M18x1.5	L		**Z58305181206**	-
1/2"	15	M22x1.5	L		**Z58305221508**	-
5/8"	18	M26x1.5	L		**Z58305261810**	-
3/4"	22	M30x2	L		**Z58305302212**	-
1"	28	M36x2	L		**Z58305362816**	-
1"1/4	35	M45x2	L		**Z58305453520**	-
1"1/2	42	M52x2	L		**Z58305524224**	-
3/8"	12	M20x1.5	S		**Z58305201206**	-
1/2"	16	M24x1.5	S		**Z58305241608**	-
5/8"	20	M30x2	S		**Z58305302010**	-
3/4"	20	M30x2	S		**Z58305302012**	-
3/4"	25	M36x2	S		**Z58305362512**	-
1"	25	M36x2	S	NEW	**Z58305362516**	-
1"	30	M42x2	S		**Z58305423016**	-
1"1/4	38	M52x2	S		**Z58305523820**	-

Machos una sola pieza rosca Métrica cono 24°

One piece Metric male cone 24°

Mâle pré-serti Métrique cône 24°

Maschio compatto Metrico sede 24°

DN	TUBO PIPE	SERIE	ROSCA THREAD	Referencia Part n°	€
3/8"	10	L	M16x1.5	**Z58203161006**	-
3/8"	12	L	M18x1.5	**Z58203181206**	-
3/8"	15	L	M22x1.5	**Z58203221506**	-
1/2"	15	L	M22x1.5	**Z58203221508**	-
1/2"	18	L	M26x1.5	**Z58203261808**	-
5/8"	18	L	M26x1.5	**Z58203261810**	-
3/4"	22	L	M30x2	**Z58203302212**	-
1"	28	L	M36x2	**Z58203362816**	-
1"1/4	35	L	M45x2	**Z58203453520**	-
1"1/2	42	L	M52x2	**Z58203524224**	-
3/8"	12	S	M20x1.5	**Z58203201206**	-
1/2"	16	S	M24x1.5	**Z58203241608**	-
5/8"	20	S	M30x2	**Z58203302010**	-
3/4"	20	S	M30x2	**Z58203302012**	-
3/4"	25	S	M36x2	**Z58203362512**	-
1"	30	S	M42x2	**Z58203423016**	-
1"1/4	38	S	M45x2	**Z58203523820**	-

Hembras gir 45° una sola pieza Métricas cono 24° - DKO 45°

One piece Metric female cone 24° (45° Elbow)

Coude 45° femelle pré-sertie Métrique cône 24°

Femmina 45° compatta Metrica sede 24°

DN	TUBO PIPE	SERIE	ROSCA THREAD		Referencia Part n°	€
3/8"	10	L	M16x1.5		**Z58306161006**	-
3/8"	12	L	M18x1.5		**Z58306181206**	-
1/2"	15	L	M22x1.5		**Z58306221508**	-
5/8"	18	L	M26x1.5		**Z58306261810**	-
3/4"	22	L	M30x2		**Z58306302212**	-
1"	28	L	M36x2		**Z58306362816**	-
1"1/4	35	L	M45x2		**Z58306453520**	-
1"1/2	42	L	M52x2		**Z58306524224**	-
3/8"	12	S	M20x1.5		**Z58306201206**	-
1/2"	16	S	M24x1.5		**Z58306241608**	-
5/8"	20	S	M30x2		**Z58306302010**	-
3/4"	20	S	M30x2		**Z58306302012**	-
3/4"	25	S	M36x2		**Z58306362512**	-
1"	25	S	M36x2	NEW	**Z58306362516**	-
1"	30	S	M42x2		**Z58306423016**	-
1"1/4	38	S	M52x2		**Z58306523820**	-

Conexiones una sola pieza Serie BWS 3SP/4SP/R12/4SH No Pelar

One piece fittings BWS Series 3SP/4SP/R12/4SH No Skive
Embouts pré-sertis Série BWS 3SP/4SP/R12/4SH Sans dénuder
Raccordi Compatti Serie BWS 3SP/4SP/R12/4SH senza spellatura

R13 & R15 Ø 3/4" - 1"

Hembras giratoias rectas una sola pieza BSP (60°) doble hex

One piece double hexagonal BSP female 60° cone

Femelle pré-sertie BSP cône 60° double hexagonal

Femmina diritta compatta BSP sede 60° doppio esagono

DN	ROSCA THREAD	Referencia Part n°	€
3/8"	3/8" BSP	**Z584000606**	-
1/2"	1/2" BSP	**Z584000808**	-
3/4"	3/4" BSP	**Z584001212**	-
1"	1" BSP	**Z584001616**	-
1"1/4	1"1/4 BSP	**Z584002020**	-
1"1/2	1"1/2 BSP	**Z584002424**	-
2"	2" BSP	**Z584003232**	-

Hembras giratorias rectas una sola pieza BSP asiento plano

One piece BSP female flat seat

Femelle pré-sertie BSP fond plat

Femmina diritta compatta BSP sede piana

DN	ROSCA THREAD	Referencia Part n°	€
3/8"	3/8" BSP	**Z582000606**	-
1/2"	1/2" BSP	**Z582000808**	-
3/4"	3/4" BSP	**Z582001212**	-
1"	1" BSP	**Z582001616**	-
1"1/4	1"1/4 BSP	**Z582002020**	-
1"1/2	1"1/2 BSP	**Z582002424**	-
2"	2" BSP	**Z582003232**	-

Hembras giratorias 90° una sola pieza BSP C/J cono 60°

One piece BSP female cone 60° w/o´ring (90° Elbow)

Coude 90° femelle pré-sertie BSP cône 60° avec joint

Femmina 90° compatta BSP sede 60° con o´ring

DN	ROSCA THREAD	Referencia Part n°	€
3/8"	3/8" BSP	**Z581170606**	-
1/2"	1/2" BSP	**Z581170808**	-
3/4"	3/4" BSP	**Z581171212**	-
1"	1" BSP	**Z581171616**	-
1"1/4	1"1/4 BSP	**Z581172020**	-
1"1/2	1"1/2 BSP	**Z581172424**	-
2"	2" BSP	**Z581173232**	-

Hembras giratorias 45° una sola pieza BSP C/J cono 60°

One piece BSP female cone 60° w/o´ring (45° Elbow)

Coude 45° femelle pré-sertie BSP cône 60° avec joint

Femmina 45° compatta BSP sede 60° con o´ring

DN	ROSCA THREAD	Referencia Part n°	€
3/8"	3/8" BSP	**Z581180606**	-
1/2"	1/2" BSP	**Z581180808**	-
3/4"	3/4" BSP	**Z581181212**	-
1"	1" BSP	**Z581181616**	-
1"1/4	1"1/4 BSP	**Z581182020**	-
1"1/2	1"1/2 BSP	**Z581182424**	-
2"	2" BSP	**Z581183232**	-

Machos una sola pieza rosca cilíndrica BSP cono 60°

One piece BSP male 60° cone

Mâle pré-serti BSP cône 60°

Maschio compatto cilindrico BSP sede 60°

DN	ROSCA THREAD	Referencia Part n°	€
3/8"	3/8" BSP	**Z581120606**	-
1/2"	1/2" BSP	**Z581120808**	-
5/8"	5/8" BSP	**Z581121010**	-
3/4"	3/4" BSP	**Z581121212**	-
1"	1" BSP	**Z581121616**	-
1"1/4	1" BSP	**Z581122016**	-
1"1/4	1"1/4 BSP	**Z581122020**	-
1"1/2	1"1/2 BSP	**Z581122424**	-
2"	2" BSP	**Z581123232**	-

Hembras giratorias rectas una sola pieza BSP C/J cono 60°

One piece BSP female 60° cone 60° w/o´ring

Femelle pré-sertie BSP cône 60° avec joint

Femmina diritta compatta BSP sede 60° con o´ring

DN MANGUERA DN HOSE	ROSCA THREAD	Referencia Part n°	€
3/8"	3/8" BSP	**Z581100606**	-
1/2"	1/2" BSP	**Z581100808**	-
3/4"	3/4" BSP	**Z581101212**	-
1"	1" BSP	**Z581101616**	-
1"1/4	1"1/4 BSP	**Z581102020**	-
1"1/2	1"1/2 BSP	**Z581102424**	-
2"	2" BSP	**Z581103232**	-

BWS

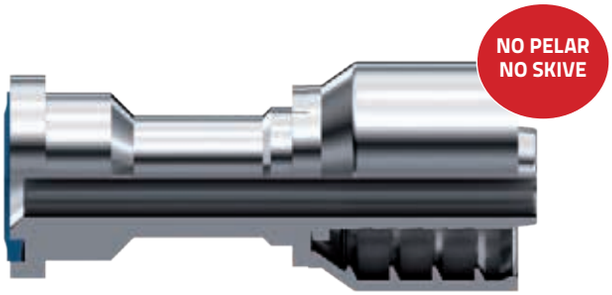

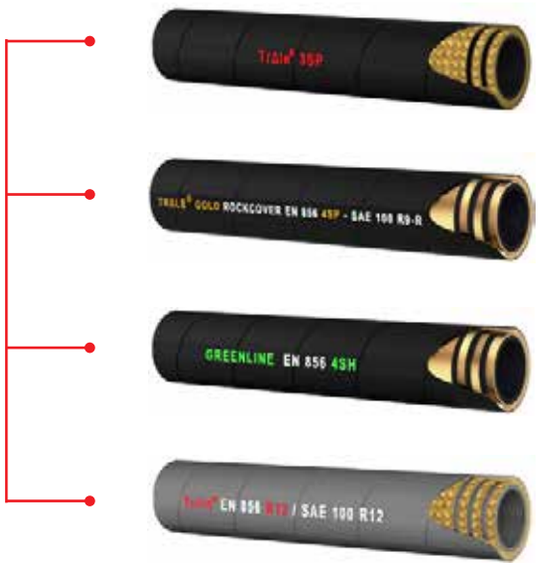

Mayor versatilidad. 1 casquillo - 4 mangueras
Greater versatility. 1 ferrule - 4 hoses

+

Reducción de stock. Uso de espiga STD
Stock optimisation. STD series

+

Menor tiempo de montaje. No pelar
Reduces assembly time. No skive

=

Ahorro económico.
Economic efficiency

BW+

1" 1/4 - 1" 1/2-2

R13 - R15

Alta presión
High pressure

+

Reducción de stock. Uso de espiga BW
Stock optimisation. BW series

+

Menor tiempo de montaje. No pelar
Reduces assembly time. No skive

Conexiones una pieza Serie BW+ R13/R15 No Pelar

One piece fittings BW+ Series R13/R15 No Skive
Embouts R13/R15 Série BW+ Sans denuder
Raccordi R13/R15 Serie BW+ senza spellatura

R13 & R15 Ø 3/4" - 1"->>BWS

Hembras giratorias rectas una sola pieza JIC 37° doble hexagonal

One piece double hexagonal JIC 37° Swivel female

Femelle pré-sertie JIC 37° double hexagonal

Femmina diritta compatta JIC 37° doppio esagono

DN	ROSCA THREAD	Referencia Part n°	€
1"1/4	1"5/8 12 UN	**Z692422620**	-
1"1/2	1"7/8 12 UN	**Z692423024**	-
2"	2" 1/2 12 UN	**Z692424032**	-

Hembras giratorias 90° una sola pieza rosca JIC 37°

One piece JIC 37° Swivel female (90° Elbow)

Coude 90° femelle pré-sertie JIC 37°

Femmina compatta 90° JIC 37°

DN	ROSCA THREAD	Referencia Part n°	€
1"1/4	1"5/8 12 UN	**Z691382620**	-
1"1/2	1"7/8 12 UN	**Z691383024**	-
2"	2" 1/2 12 UN	**Z691384032**	-

Machos una sola pieza rosca JIC 37° C/J

One piece JIC 37° male with o'ring

Mâle pré-serti JIC 37° avec joint torique

Maschio compatto JIC 37° con o'ring

DN	ROSCA THREAD	Referencia Part n°	€
1"1/4	1"5/8 12 UN	**Z691412620**	-
1"1/2	1"7/8 12 UN	**Z691413024**	-
2"	2" 1/2 12 UN	**Z691414032**	-

Hembras giratorias 45° una sola pieza rosca JIC 37°

One piece JIC 37° Swivel female (45° Elbow)

Coude 45° femelle pré-sertie JIC 37°

Femmina compatta 45° JIC 37°

DN	ROSCA THREAD	Referencia Part n°	€
1"1/4	1"5/8 12 UN	**Z691392620**	-
1"1/2	1"7/8 12 UN	**Z691393024**	-
2"	2" 1/2 12 UN	**Z691394032**	-

Hembras giratorias rectas una sola pieza ORFS doble hexagonal

One piece ORFS Swivel female straight double hexagonal

Femelle pré-sertie droite ORFS double hexagonale

Femmina diritta compatta ORFS doppio esagono

DN	ROSCA THREAD	Referencia Part n°	€
1"1/4	1" 11/16 12 UN	**Z699012720**	-
1"1/2	2" 12 UN	**Z699013224**	-

Hembras giratorias 90° una sola pieza ORFS

One piece ORFS Swivel female (90° Elbow)

Coude 90° femelle pré-sertie ORFS

Femmina 90° compatta ORFS

DN	ROSCA THREAD	Referencia Part n°	€
1"1/4	1" 11/16 12 UN	**Z699072720**	-
1" 1/2	2" 12 UN	**Z699073224**	-

Hembras giratorias 45° una sola pieza ORFS

One piece ORFS Swivel female (45° Elbow)

Coude 45° femelle pré-sertie ORFS

Femmina 45° compatta ORFS

DN	ROSCA THREAD	Referencia Part n°	€
1"1/4	1"11/16 12 UN	**Z699082720**	-
1"1/2	2" 12 UN	**Z699083224**	-

Machos una sola pieza ORFS

One piece ORFS Male

Mâle pré-serti ORFS

Maschio compatto ORFS

DN	ROSCA THREAD	Referencia Part n°	€
1"1/4	1"11/16 12 UN	**Z699122720**	-
1"1/2	2" 12 UN	**Z699123224**	-

Conexiones una pieza Serie BW+ R13/R15 No Pelar

One piece fittings BW+ Series R13/R15 No Skive
Embouts R13/R15 Série BW+ Sans denuder
Raccordi R13/R15 Serie BW+ senza spellatura

R13 & R15 Ø 3/4" - 1"->>BWS

Hembras gir rectas una sola pieza rosca NPSM (60°) doble hex

One piece double hexagonal NPSM female 60° cone

Femelle pré-sertie NPSM cône 60° double hexagonal

Femmina diritta compatta NPSM sede 60° doppio esagono

DN	ROSCA THREAD	Referencia Part n°	€
1"1/4	1"1/4 - 11 1/2 h NPSM	**Z693612020**	-
1"1/2	1"1/2 - 11 1/2 h NPSM	**Z693612424**	-
2"	2" - 11 1/2 h NPSM	**Z693613232**	-

Machos una sola pieza rosca cónica NPT

One piece NPT Male pipe straight

Mâle pré-serti conique NPT

Maschio compatto conico NPT

DN	ROSCA THREAD	Referencia Part n°	€
1"1/4	1"1/4 - 11 1/2 h NPSM	**Z691612020**	-
1"1/2	1"1/2 - 11 1/2 h NPSM	**Z691612424**	-
2"	2" - 11 1/2 h NPSM	**Z691613232**	-

Bridas recta SAE 6000 PSI

One piece 6000 PSI SAE Straight Flange / Code 62

Bride SAE droite pré-sertie série 6000 PSI

Flangia diritta compatta SAE 6000

DN	Ø	Referencia Part n°	€
1"1/4	1"1/4	**Z692822020**	-
1"1/2	1"1/2	**Z692822424**	-
2"	2"	**Z692823232**	-

Bridas a 90° SAE 6000 PSI

One piece 6000 PSI SAE Flange (90° Elbow) / Code 62

Bride SAE coude 90° pré-sertie série 6000 PSI

Flangia 90° compatta SAE 6000

DN	Ø	Referencia Part n°	€
1"1/4	1"1/4	**Z692832020**	-
1"1/2	1"1/2	**Z692832424**	-
2"	2"	**Z692833232**	-

Bridas a 45° SAE 6000 PSI

One piece 6000 PSI SAE Flange (45° Elbow) / Code 62

Bride SAE coude 45° pré-sertie série 6000 PSI

Flangia 45° compatta SAE 6000

DN	Ø	Referencia Part n°	€
1"1/4	1"1/4	**Z692842020**	-
1"1/2	1"1/2	**Z692842424**	-
2"	2"	**Z692843232**	-

Conexiones una pieza Serie BW+ R13/R15 No Pelar

One piece fittings BW+ Series R13/R15 No Skive
Embouts R13/R15 Série BW+ Sans denuder
Raccordi R13/R15 Serie BW+ senza spellatura

R13 & R15 Ø 3/4" - 1"->>BWS

Hembras giratorias una pieza BSP 60° doble hex c/j tca eng. NEW

One piece double hexagonal BSP Swivel female cone 60° with o´ring wire nut
Femelle BSP pré-sertie cône 60° double hexagonal with o'ring écrou à douille
Femmina diritta compatta BSP sede 60° doppio esagono con guarnizione dado spinato

DN	ROSCA THREAD	Referencia Part n°	€
1"1/4	1"1/4 BSP	**Z695102020**	-
1"1/2	1"1/2 BSP	**Z695102424**	-
2"	2" BSP	**Z695103232**	-

Hembras giratorias 90° una sola pieza BSP 60° c/j tca eng. NEW

One piece BSP Swivel female 60° cone with o'ring (90° Elbow) wire nut
Coude 90° femelle pré-sertie BSP 60° avec o'ring écrou à douille
Femmina 90° compatta BSP sede 60° con o'ring dado spinato

DN	ROSCA THREAD	Referencia Part n°	€
1"1/4	1"1/4 BSP	**Z695172020**	-
1"1/2	1"1/2 BSP	**Z695172424**	-
2"	2" BSP	**Z695173232**	-

Machos cilíndricos una sola pieza BSP 60°

One piece BSP Male 60° cone
Mâle pré-serti gaz cylindrique BSP 60°
Maschio compatto BSP cilindrico sede 60°

DN	ROSCA THREAD	Referencia Part n°	€
1"1/4	1"1/4 BSP	**Z691122020**	-
1"1/2	1"1/2 BSP	**Z691122424**	-
2"	2" BSP	**Z691123232**	-

Hembras giratorias 45° una sola pieza BSP 60° c/j tca eng. NEW

One piece BSP Swivel female 60° cone with o'ring (45° Elbow) wire nut
Coude 45° femelle pré-sertie BSP 60° avec o'ring écrou à douille
Femmina 45° compatta BSP sede 60° con o'ring dado spinato

DN	ROSCA THREAD	Referencia Part n°	€
1"1/4	1"1/4 BSP	**Z695182020**	-
1"1/2	1"1/2 BSP	**Z695182424**	-
2"	2" BSP	**Z695183232**	-

BAJO CONSULTA UNDER REQUEST — BW+ MÉTRICAS / METRIC BW+

- Hembras giratorias rectas una sola pieza rosca Métrica cono 24° con junta tórica
  One piece Metric swivel female 24° seat with o'ring

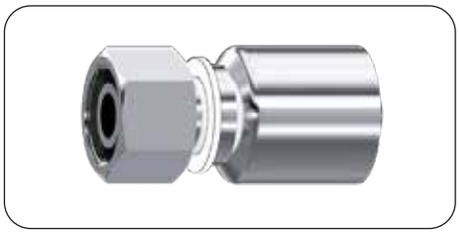

Ref: Z69204

- Hembras giratorias 90° una sola pieza Métricas cono 24° con junta tórica
  One piece Metric swivel female 24° seat with o'ring

Ref: Z69205

- Macho una sola pieza Métricos cono 24°
  One piece Metric male stud 24° cone

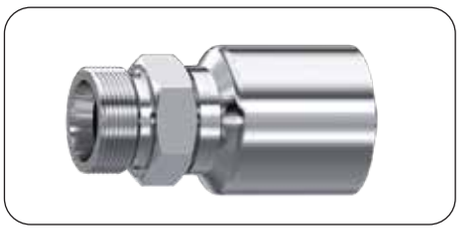

Ref: Z69203

- Hembras giratorias 45° una sola pieza Métricas cono 24° con junta tórica
  One piece Metric swivel female 24° seat with o'ring

Ref: Z69206

Conexiones una sola pieza R7/ R8/ Elastómero malla metálica

One piece fittings R7/R8 & Elastomer Braid of steel wire
Embouts pré-sertis R7/R8 et Elastomère tresse métallique
Raccordi compatti serie R7/R8 e elastomero treccia metallica

Hembras giratorias rectas una sola pieza rosca JIC 37° doble hex

One piece double hexagonal JIC 37° female

Femelle pré-sertie JIC 37° double hexagonal

Femmina diritta compatta JIC 37° doppio esagono

DN	ROSCA THREAD	Referencia Part n°	€
3/16"	7/16" 20h UNF	**872420703**	-
1/4"	7/16" 20h UNF	**872420704**	-
5/16"	7/16" 20h UNF	**872420705**	-
1/4"	9/16" 18h UNF	**872420904**	-
5/16"	9/16" 18h UNF	**872420905**	-
3/8"	9/16" 18h UNF	**872420906**	-
1/2"	3/4" 16h UNF	**872421208**	-
1/2"	7/8" 14h UNF	**872421408**	-
5/8"	1"1/16 12h UN	**872421710**	-
3/4"	1"1/16 12h UN	**872421712**	-
1"	1"5/16 12h UN	**872422116**	-

Hembras giratorias 90° una sola pieza rosca JIC 37°

One piece JIC 37° female (90° Elbow)

90° Femelle pré-sertie JIC 37°

Femmina 90° compatta JIC 37°

DN	ROSCA THREAD		Referencia Part n°	€
3/16"	7/16" 20h UNF		**871380703**	-
1/4"	7/16" 20h UNF		**871380704**	-
1/4"	9/16" 18h UNF		**871380904**	-
3/8"	9/16" 18h UNF		**871380906**	-
1/2"	3/4" 16h UNF		**871381208**	-
1/2"	7/8" 14 UNF	NEW	**871381408**	-
3/4"	1"1/16 12h UN		**871381712**	-
1"	1"5/16 12h UN		**871382116**	-

Machos una sola pieza rosca JIC 37°

One piece JIC 37° male

Mâle pré-serti JIC 37°

Maschio compatto JIC sede 37°

DN	ROSCA THREAD		Referencia Part n°	€
3/16"	7/16" 20h UNF	NEW	**871400703**	-
1/4"	7/16" 20h UNF		**871400704**	-
3/8"	9/16" 18h UNF		**871400906**	-
1/2"	3/4" 16h UNF		**871401208**	-
3/4"	1"1/16 12h UN		**871401712**	-
1"	1"5/16 12h UN		**871402116**	-

Hembras giratorias rectas una sola pieza rosca JIC 37°

One piece JIC 37° female

Femelle pré-sertie JIC 37°

Femmina diritta compatta JIC 37°

DN	ROSCA THREAD	Referencia Part n°	€
3/16"	7/16" 20h UNF	**871420703**	-
1/4"	7/16" 20h UNF	**871420704**	-
1/4"	9/16" 18h UNF	**871420904**	-
5/16"	9/16" 18h UNF	**871420905**	-
3/8"	9/16" 18h UNF	**871420906**	-
1/2"	3/4" 16h UNF	**871421208**	-
1/2"	7/8" 14h UNF	**871421408**	-
3/4"	1"1/16 12h UN	**871421712**	-
1"	1"5/16 12h UN	**871422116**	-

Hembras giratorias 45° una sola pieza rosca JIC 37°

One piece JIC 37° female (45° Elbow)

45° Femelle pré-sertie JIC 37°

Femmina 45° compatta JIC 37°

DN	ROSCA THREAD	Referencia Part n°	€
1/4"	7/16" 20h UNF	**871390704**	-
3/8"	9/16" 18h UNF	**871390906**	-
1/2"	3/4" 16h UNF	**871391208**	-
3/4"	1"1/16 12h UN	**871391712**	-
1"	1"5/16 12h UN	**871392116**	-

Conexiones una sola pieza R7/ R8/ Elastómero malla metálica

One piece fittings R7/R8 & Elastomer Braid of steel wire
Embouts pré-sertis R7/R8 et Elastomère tresse métallique
Raccordi compatti serie R7/R8 e elastomero treccia metallica

Hembras giratorias rectas una sola pieza rosca ORFS doble hex

One piece double hexagonal ORFS female

Femelle pré-sertie ORFS double hexagonal

Femmina diritta compatta ORFS

DN	ROSCA THREAD	Referencia Part n°	€
1/4"	9/16"-18h	**879000904**	-
3/8"	11/16"-16h	**879001106**	-
3/8"	13/16"-16h	**879001306**	-
1/2"	13/16"-16h	**879001308**	-
3/4"	1"3/16-12h	**879001912**	-
1"	1"7/16-12h	**879002316**	-

Hembras giratorias 90° una sola pieza rosca ORFS

One piece ORFS female (90° Elbow)

90° Femelle pré-sertie ORFS

Femmina 90° compatta ORFS

DN	ROSCA THREAD	Referencia Part n°	€
1/4"	9/16"-18h	**879070904**	-
3/8"	11/16"-16h	**879071106**	-
1/2"	13/16"-16h	**879071308**	-
3/4"	1"3/16-12h	**879071912**	-
1"	1"7/16-12h	**879072316**	-

Machos compactos rosca ORFS

One piece ORFS male

Mâle pré-serti ORFS

Maschio compatto ORFS

DN	ROSCA THREAD	Referencia Part n°	€
1/4"	9/16"-18h	**879120904**	-
3/8"	11/16"-16h	**879121106**	-
1/2"	13/16"-16h	**879121308**	-
3/4"	1"3/16-12h	**879121912**	-
1"	1"7/16-12h	**879122316**	-

Hembras giratorias 45° una sola pieza rosca ORFS

One piece ORFS female (45° Elbow)

45° Femelle pré-sertie ORFS

Femmina 45° compatta ORFS

DN	ROSCA THREAD	Referencia Part n°	€
1/4"	9/16"-18h	**879080904**	-
3/8"	11/16"-16h	**879081106**	-
1/2"	13/16"-16h	**879081308**	-
3/4"	1"3/16-12h	**879081912**	-
1"	1"7/16-12h	**879082316**	-

Configura tus propias conexiones en Una sola pieza (43/R7/R8/PTFE/BWS). Consúltanos

Configure your own One piece series fittings (43/R7/R8/PTFE/BWS). Consult us.

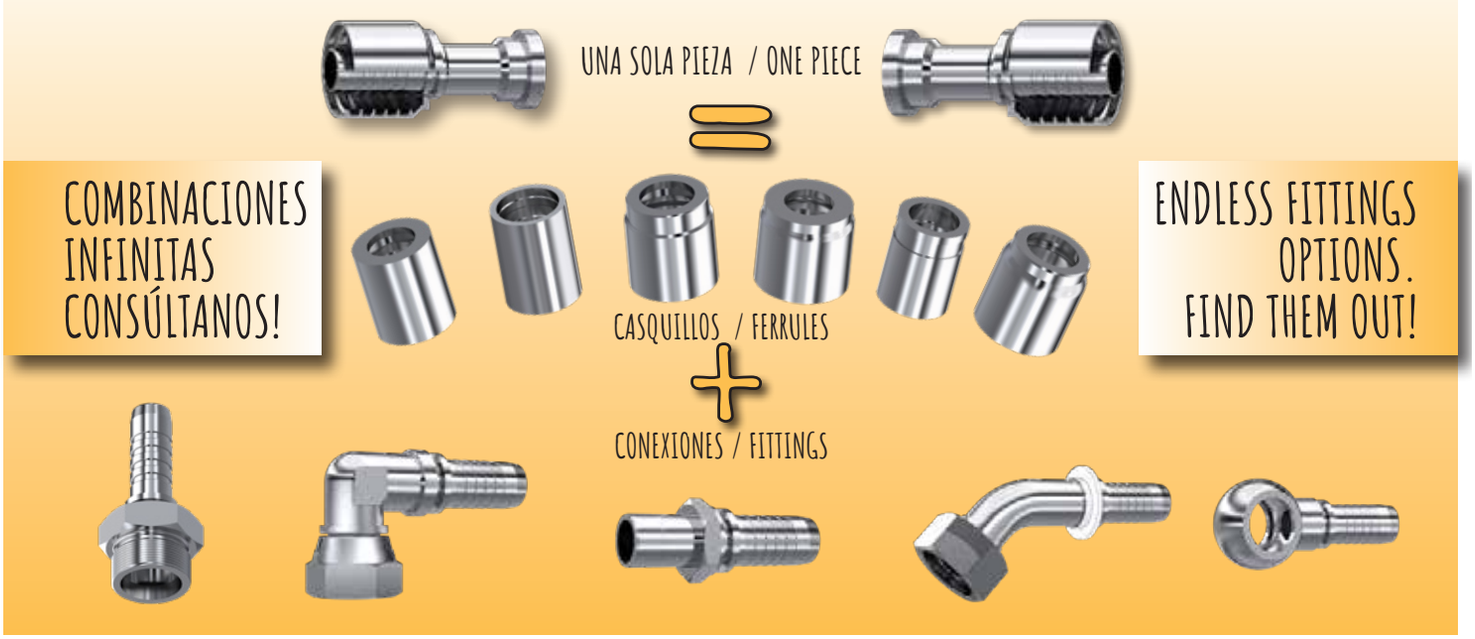

Conexiones una sola pieza R7/ R8/ Elastómero malla metálica

One piece fittings R7/R8 & Elastomer Braid of steel wire
Embouts pré-sertis R7/R8 et Elastomère tresse métallique
Raccordi compatti serie R7/R8 e elastomero treccia metallica

Hembras giratorias rectas una sola pieza NPSM (60°) doble hex

One piece double hexagonal NPSM female 60° cone

Femelle pré-sertie NPSM cône 60° double hexagonal

Femmina diritta compatta NPSM sede 60° doppio esagono

DN	ROSCA THREAD	Referencia Part n°	€
1/4"	1/4" NPSM	**873610404**	-
3/8"	3/8" 18h NPSM	**873610606**	-
1/2"	1/2" 14h NPSM	**873610808**	-
3/4"	3/4" NPSM	**873611212**	-
1"	1" - 11 1/2 h NPSM	**873611616**	-

Hembras giratorias rectas una sola pieza NPSM cono 60°

One piece NPSM female 60° cone

Femelle pré-sertie NPSM cône 60°

Femmina diritta compatta NPSM sede 60°

DN	ROSCA THREAD	Referencia Part n°	€
1/4"	1/4" 18h NPSM	**872610404**	-
3/8"	3/8" 18h NPSM	**872610606**	-
1/2"	1/2" 14h NPSM	**872610808**	-
3/4"	3/4" 14h NPSM	**872611212**	-
1"	1" - 11 1/2 h NPSM	**872611616**	-

Hembras giratorias 90° una sola pieza NPSM cono 60°

One piece NPSM female 60° cone (90° Elbow)

90° Femelle pré-sertie NPSM cône 60°

Femmina 90° compatta NPSM sede 60°

DN	ROSCA THREAD	Referencia Part n°	€
1/4"	1/4" 18h NPSM	**872620404**	-
3/8"	3/8" 18h NPSM	**872620606**	-
1/2"	1/2" 14h NPSM	**872620808**	-
3/4"	3/4" 14h NPSM	**872621212**	-
1"	1" - 11 1/2 h NPSM	**872621616**	-

Hembras giratorias 45° una sola pieza NPSM cono 60°

One piece NPSM female 60° cone (45° Elbow)

45° Femelle pré-sertie NPSM cône 60°

Femmina 45° compatta NPSM sede 60°

DN	ROSCA THREAD	Referencia Part n°	€
1/4"	1/4" 18h NPSM	**872630404**	-
3/8"	3/8" 18h NPSM	**872630606**	-
1/2"	1/2" 14h NPSM	**872630808**	-
3/4"	3/4" 14h NPSM	**872631212**	-
1"	1" - 11 1/2 h NPSM	**872631616**	-

Machos una sola pieza rosca cónica NPT

One piece NPT male pipe straight

Mâle pré-serti NPT

Maschio compatto conico NPT

DN	ROSCA THREAD		Referencia Part n°	€
1/4"	1/8" NPT	NEW	**871610204**	-
3/16"	1/4" NPT		**871610403**	-
1/4"	1/4" NPT		**871610404**	-
3/8"	1/4" NPT		**871610406**	-
1/4"	3/8" NPT		**871610604**	-
3/8"	3/8" NPT		**871610606**	-
1/2"	1/2" NPT		**871610808**	-
3/4"	1/2" NPT	NEW	**871610812**	-
3/4"	3/4" NPT		**871611212**	-
1"	1" NPT		**871611616**	-

Conexiones una sola pieza R7/ R8/ Elastómero malla metálica

One piece fittings R7/R8 & Elastomer Braid of steel wire
Embouts pré-sertis R7/R8 et Elastomère tresse métallique
Raccordi compatti serie R7/R8 e elastomero treccia metallica

Hembras gir rectas una sola pieza rosca Métrica cono 24° - DKO

One piece Metric female 24° cone

Femelle pré-sertie Métrique cône 24°

Femmina diritta compatta Metrica sede 24°

DN	TUBO PIPE	SERIE SERIES	ROSCA THREAD	Referencia Part n°	€
3/16"	6	L	M12x1.5	**87804120603**	-
1/4"	6	L	M12x1.5	**87804120604**	-
1/4"	8	L	M14x1.5	**87804140804**	-
3/8"	10	L	M16x1.5	**87804161006**	-
3/8"	12	L	M18x1.5	**87804181206**	-
1/2"	15	L	M22x1.5	**87804221508**	-
3/4"	22	L	M30x2	**87804302212**	-
1"	28	L	M36x2	**87804362816**	-
1/4"	8	S	M16x1.5	**87804160804**	-
1/4"	10	S	M18x1.5	**87804181004**	-
3/8"	12	S	M20x1.5	**87804201206**	-
1/2"	16	S	M24x1.5	**87804241608**	-
3/4"	20	S	M30x2	**87804302012**	-
3/4"	25	S	M36x2	**87804362512**	-
1"	30	S	M42x2	**87804423016**	-

Hembras gir 90° una sola pieza Métricas cono 24° - DKO 90°

One piece Metric female 24° cone (90° Elbow)

90° Femelle pré-sertie Métrique cône 24°

Femmina 90° compatta Metrica sede 24°

DN	TUBO PIPE	SERIE SERIES	ROSCA THREAD	Referencia Part n°	€
1/4"	8	L	M14x1.5	**87305140804**	-
3/8"	10	L	M16x1.5	**87305161006**	-
3/8"	12	L	M18x1.5	**87305181206**	-
1/2"	15	L	M22x1.5	**87305221508**	-
3/4"	22	L	M30x2	**87305302212**	-
1"	28	L	M36x2	**87305362816**	-
1/4"	8	S	M16x1.5	**87305160804**	-
1/4"	10	S	M18x1.5	**87305181004**	-
3/8"	12	S	M20x1.5	**87305201206**	-
1/2"	16	S	M24x1.5	**87305241608**	-
3/4"	25	S	M36x2	**87305362512**	-
1"	30	S	M42x2	**87305423016**	-

Machos una sola pieza rosca Métrica cono 24°

One piece Metric male 24° cone

Mâle pré-serti Métrique cône 24°

Maschio compatto Metrico sede 24°

DN	TUBO PIPE	SERIE SERIES	ROSCA THREAD	Referencia Part n°	€
1/4"	8	L	M14x1.5	**87203140804**	-
3/8"	12	L	M18x1.5	**87203181206**	-
1/2"	15	L	M22x1.5	**87203221508**	-
3/4"	22	L	M30x2	**87203302212**	-
1"	28	L	M36x2	**87203362816**	-
1/4"	8	S	M16x1.5	**87203160804**	-
1/4"	10	S	M18x1.5	**87203181004**	-
3/8"	12	S	M20x1.5	**87203201206**	-
1/2"	16	S	M24x1.5	**87203241608**	-
3/4"	25	S	M36x2	**87203362512**	-
1"	30	S	M42x2	**87203423016**	-

Hembras gir 45° una sola pieza Métricas cono 24° - DKO 45°

One piece Metric female 24° cone (45° Elbow)

45° Femelle pré-sertie Métrique cône 24°

Femmina 45° compatta Metrica sede 24°

DN	TUBO PIPE	SERIE SERIES	ROSCA THREAD	Referencia Part n°	€
1/4"	8	L	M14x1.5	**87306140804**	-
3/8"	10	L	M16x1.5	**87306161006**	-
3/8"	12	L	M18x1.5	**87306181206**	-
1/2"	15	L	M22x1.5	**87306221508**	-
3/4"	22	L	M30x2	**87306302212**	-
1"	28	L	M36x2	**87306362816**	-
1/4"	8	S	M16x1.5	**87306160804**	-
1/4"	10	S	M18x1.5	**87306181004**	-
3/8"	12	S	M20x1.5	**87306201206**	-
1/2"	16	S	M24x1.5	**87306241608**	-
3/4"	25	S	M36x2	**87306362512**	-
1"	30	S	M42x2	**87306423016**	-

Conexiones una sola pieza R7/ R8/ Elastómero malla metálica

One piece fittings R7/R8 & Elastomer Braid of steel wire
Embouts pré-sertis R7/R8 et Elastomère tresse métallique
Raccordi compatti serie R7/R8 e elastomero treccia metallica

Hembras giratorias rectas una sola pieza BSP (60°) doble hex

One piece double hexagonal BSP female 60° cone

Femelle pré-sertie BSP cône 60° double hexagonal

Femmina diritta compatta BSP sede 60° doppio esagono

DN	ROSCA THREAD	Referencia Part n°	€
1/4"	1/4" BSP	**874000404**	-
3/8"	3/8" BSP	**874000606**	-
1/2"	1/2" BSP	**874000808**	-
3/4"	3/4" BSP	**874001212**	-
1"	1" BSP	**874001616**	-

Hembras giratorias 90° una sola pieza rosca BSP cono 60°

One piece BSP female 60° cone (90° Elbow)

90° Femelle pré-sertie BSP cône 60°

Femmina 90° compatta BSP sede 60°

DN	ROSCA THREAD		Referencia Part n°	€
3/16"	1/4" BSP	NEW	**871070403**	-
1/4"	1/4" BSP		**871070404**	-
1/4"	3/8" BSP		**871070604**	-
3/8"	3/8" BSP		**871070606**	-
1/2"	1/2" BSP		**871070808**	-
3/4"	3/4" BSP		**871071212**	-
1"	1" BSP		**871071616**	-

Machos una sola pieza rosca cilíndrica BSP cono 60°

One piece BSP male 60° cone

Mâle pré-serti BSP cône 60°

Maschio compatto cilindrico BSP sede 60°

DN	ROSCA THREAD	Referencia Part n°	€
1/4"	1/4" BSP	**871120404**	-
3/8"	3/8" BSP	**871120606**	-
1/2"	1/2" BSP	**871120808**	-
3/4"	3/4" BSP	**871121212**	-
1"	1" BSP	**871121616**	-

Hembras giratorias rectas una sola pieza rosca BSP cono 60°

One piece BSP female 60° cone

Femelle pré-sertie BSP cône 60°

Femmina diritta compatta BSP sede 60°

DN	ROSCA THREAD	Referencia Part n°	€
3/16"	1/4" BSP	**871000403**	-
1/4"	1/4" BSP	**871000404**	-
3/8"	3/8" BSP	**871000606**	-
1/2"	1/2" BSP	**871000808**	-
3/4"	3/4" BSP	**871001212**	-
1"	1" BSP	**871001616**	-

Hembras giratorias 45° una sola pieza rosca BSP cono 60°

One piece BSP female 60° cone (45° Elbow)

45° Femelle pré-sertie BSP cône 60°

Femmina 45° compatta BSP sede 60°

DN	ROSCA THREAD		Referencia Part n°	€
3/16"	1/4" BSP	NEW	**871080403**	-
1/4"	1/4" BSP		**871080404**	-
3/8"	3/8" BSP		**871080606**	-
1/2"	1/2" BSP		**871080808**	-
3/4"	3/4" BSP		**871081212**	-
1"	1" BSP		**871081616**	-

Conexiones una sola pieza PTFE Liso / R14

One piece fittings for Smooth PTFE/ R14
Embouts pré-sertis pour PTFE lisse/ R14
Raccordi compatti per PTFE liscio/ R14

Hembras gir rectas una sola pieza rosca JIC 37° doble hex

One piece JIC 37° double hexagonal female

Femelle pré-sertie JIC 37° double hexagonal

Femmina diritta JIC 37° doppio esagono

DN	ROSCA THREAD	Referencia Part n°	€
3/16"	7/16" 20h UNF	**862420703**	-
1/4"	7/16" 20h UNF	**862420704**	-
5/16"	7/16" 20h UNF NEW	**862420705**	-
1/4"	1/2" 20h UNF	**862420804**	-
5/16"	1/2" 20h UNF	**862420805**	-
5/16"	9/16" 18h UNF	**862420905**	-
3/8"	9/16" 18h UNF	**862420906**	-
3/8"	3/4" 16h UNF	**862421206**	-
1/2"	3/4" 16h UNF	**862421208**	-
5/8"	3/4" 16h UNF	**862421210**	-
1/2"	3/4" 16h UNF	**862421408**	-
5/8"	3/4" 16h UNF	**862421410**	-
1/2"	1"1/16 12h UN	**862421708**	-
5/8"	1"1/16 12h UN	**862421710**	-
3/4"	1"1/16 12h UN	**862421712**	-
1"	1"1/16 12h UN	**862421716**	-
3/4"	1"5/16 12h UN	**862422112**	-
1"	1"5/16 12h UN	**862422116**	-

Hembras giratorias 90° una sola pieza rosca JIC 37°

One piece JIC 37° female (90° Elbow)

90° Femelle pré-sertie JIC 37°

Femmina 90° compatta JIC 37°

DN	ROSCA THREAD	Referencia Part n°	€
3/16"	7/16" 20h UNF	**861380703**	-
1/4"	7/16" 20h UNF	**861380704**	-
5/16"	9/16" 18h UNF	**861380905**	-
3/8"	9/16" 18h UNF	**861380906**	-
1/2"	3/4" 16h UNF	**861381208**	-
1/2"	7/8" 14UNF	**861381408**	-
5/8"	7/8" 14UNF	**861381410**	-
3/4"	1"1/16 12h UN	**861381712**	-
1"	1"5/16 12h UN	**861382116**	-

Machos una sola pieza rosca JIC 37°

One piece JIC 37° male

Mâle pré-serti JIC 37°

Maschio compatto JIC sede 37°

DN	ROSCA THREAD	Referencia Part n°	€
1/4"	7/16" 20h UNF	**861400704**	-
3/8"	9/16" 18h UNF	**861400906**	-
1/2"	3/4" 16h UNF	**861401208**	-
5/8"	1"1/16 12h UN	**861401710**	-
3/4"	1"1/16 12h UN	**861401712**	-
1"	1"5/16 12h UN	**861402116**	-

Hembras giratorias rectas una sola pieza rosca JIC 37°

One piece JIC 37° female

Femelle pré-sertie JIC 37°

Femmina diritta compatta JIC 37°

DN	ROSCA THREAD	Referencia Part n°	€
1/4"	7/16" 20h UNF	**861420704**	-
3/16"	7/16" 20h UNF	**861420703**	-
1/4"	1/2" 20h UNF	**861420804**	-
5/16"	1/2" 20h UNF	**861420805**	-
5/16"	9/16" 18h UNF	**861420905**	-
3/8"	9/16" 18h UNF	**861420906**	-
3/8"	3/4" 16h UNF	**861421206**	-
1/2"	3/4" 16h UNF	**861421208**	-
3/4"	1"1/16 12h UN	**861421712**	-
1"	1"5/16 12h UN	**861422116**	-

Hembras giratorias 45° una sola pieza rosca JIC 37°

One piece JIC 37° female (45° Elbow)

45° Femelle pré-sertie JIC 37°

Femmina 45° compatta JIC 37°

DN	ROSCA THREAD	Referencia Part n°	€
1/4"	7/16" 20h UNF	**861390704**	-
5/16"	9/16" 18h UNF	**861390905**	-
3/8"	9/16" 18h UNF	**861390906**	-
1/2"	3/4" 16h UNF	**861391208**	-
1/2"	7/8" 14h UNF	**861391408**	-
5/8"	7/8" 14h UNF	**861391410**	-
3/4"	1"1/16 12h UN	**861391712**	-
1"	1"5/16 12h UN	**861392116**	-

Conexiones una sola pieza PTFE Liso / R14

One piece fittings for Smooth PTFE/ R14
Embouts pré-sertis pour PTFE lisse/ R14
Raccordi compatti per PTFE liscio/ R14

Hembras giratorias rectas una sola pieza rosca ORFS doble hex

One piece doble hexagonal ORFS female

Femelle pré-sertie ORFS double hexagonal

Femmina diritta compatta ORFS

DN	ROSCA THREAD	Referencia Part n°	€
1/4"	9/16"-18h	**869000904**	-
5/16"	11/16"-16h	**869001105**	-
3/8"	11/16"-16h	**869001106**	-
1/2"	13/16"-16h	**869001308**	-
3/4"	1"3/16-12h	**869001912**	-
1"	1"7/16-12h	**869002316**	-

Hembras giratorias 90° una sola pieza rosca ORFS

One piece ORFS female (90° Elbow)

90° Femelle pré-sertie ORFS

Femmina 90° compatta ORFS

DN	ROSCA THREAD		Referencia Part n°	€
1/4"	9/16"-18h		**869070904**	-
3/8"	11/16"-16h		**869071106**	-
1/2"	13/16"-16h		**869071308**	-
5/8"	1" 14 UNS	NEW	**869071610**	-
3/4"	1"3/16-12h		**869071912**	-
1"	1"7/16-12h		**869072316**	-

Machos una sola pieza rosca ORFS

One piece ORFS male

Mâle pré-serti ORFS

Maschio compatto ORFS

DN	ROSCA THREAD	Referencia Part n°	€
1/4"	9/16"-18h	**869120904**	-
3/8"	11/16"-16h	**869121106**	-
1/2"	13/16"-16h	**869121308**	-
3/4"	1"3/16-12h	**869121912**	-
1"	1"7/16-12h	**869122316**	-

Hembras giratorias 45° una sola pieza rosca ORFS

One piece ORFS female (45° Elbow)

45° Femelle pré-sertie ORFS

Femmina 45° compatta ORFS

DN	ROSCA THREAD	Referencia Part n°	€
1/4"	9/16"-18h	**869080904**	-
3/8"	11/16"-16h	**869081106**	-
1/2"	13/16"-16h	**869081308**	-
3/4"	1"3/16-12h	**869081912**	-
1"	1"7/16-12h	**869082316**	-

Conexiones una sola pieza PTFE Liso / R14

One piece fittings for Smooth PTFE/ R14
Embouts pré-sertis pour PTFE lisse/ R14
Raccordi compatti per PTFE liscio/ R14

Hembras giratorias rectas una sola pieza NPSM (60°) doble hex

One piece double hexagonal NPSM female 60° cone

Femelle pré-sertie NPSM cône 60° double hexagonal

Femmina diritta compatta NPSM sede 60° doppio esagono

DN	ROSCA THREAD	Referencia Part n°	€
1/4"	1/4" NPSM	**863610404**	-
3/8"	3/8" 18h NPSM	**863610606**	-
1/2"	1/2" 14h NPSM	**863610808**	-
3/4"	3/4" NPSM	**863611212**	-
1"	1" - 11 1/2 h NPSM	**863611616**	-

Hembras giratorias rectas una sola pieza rosca NPSM cono 60°

One piece NPSM female 60° cone

Femelle pré-sertie NPSM cône 60°´

Femmina diritta compatta NPSM sede 60°

DN	ROSCA THREAD	Referencia Part n°	€
1/4"	1/4" 18h NPSM	**862610404**	-
3/8"	3/8" 18h NPSM	**862610606**	-
1/2"	1/2" 14h NPSM	**862610808**	-
3/4"	3/4" 14h NPSM	**862611212**	-
1"	1" - 11 1/2 h NPSM	**862611616**	-

Hembras giratorias 90° una sola pieza rosca NPSM cono 60°

One piece NPSM female 60° cone (90° Elbow)

90° Femelle pré-sertie NPSM cône 60°

Femmina 90° compatta NPSM sede 60°

DN	ROSCA THREAD	Referencia Part n°	€
1/4"	1/4" 18h NPSM	**862620404**	-
3/8"	3/8" 18h NPSM	**862620606**	-
1/2"	1/2" 14h NPSM	**862620808**	-
3/4"	3/4" 14h NPSM	**862621212**	-
1"	1" - 11 1/2 h NPSM	**862621616**	-

Hembras giratorias 45° una sola pieza rosca NPSM cono 60°

One piece NPSM female 60° cone (45° Elbow)

45° Femelle pré-sertie NPSM cône 60°

Femmina 45° compatta NPSM sede 60°

DN	ROSCA THREAD	Referencia Part n°	€
1/4"	1/4" 18h NPSM	**862630404**	-
3/8"	3/8" 18h NPSM	**862630606**	-
1/2"	1/2" 14h NPSM	**862630808**	-
3/4"	3/4" 14h NPSM	**862631212**	-
1"	1" - 11 1/2 h NPSM	**862631616**	-

Machos una sola pieza rosca cónica NPT

One piece NPT male pipe

Mâle pré-serti NPT

Maschio compatto conico NPT

DN	ROSCA THREAD	Referencia Part n°	€
1/4"	1/8" NPT	**861610204**	-
3/16"	1/4" NPT	**861610403**	-
1/4"	1/4" NPT	**861610404**	-
5/16"	1/4" NPT	**861610405**	-
3/8"	1/4" NPT	**861610406**	-
1/4"	3/8" NPT	**861610604**	-
5/16"	3/8" NPT	**861610605**	-
3/8"	3/8" NPT	**861610606**	-
1/2"	1/2" NPT	**861610608**	-
3/8"	1/2" NPT	**861610806**	-
1/2"	1/2" NPT	**861610808**	-
5/8"	1/2" NPT	**861610810**	-
1/2"	3/4" NPT	**861611208**	-
5/8"	3/4" NPT	**861611210**	-
3/4"	3/4" NPT	**861611212**	-
3/4"	1" NPT	**861611612**	-
1"	1" NPT	**861611616**	-
1"	1" 1/4 NPT	**861612016**	-

Conexiones una sola pieza PTFE Liso / R14

One piece fittings for Smooth PTFE/ R14
Embouts pré-sertis pour PTFE lisse/ R14
Raccordi compatti per PTFE liscio/ R14

Hembras gir DKO rectas una sola pieza rosca Métrica 24°

One piece Metric female 24° cone

Femelle pré-sertie Métrique cône 24°

Femmina diritta compatta Metrica sede 24°

DN	TUBO PIPE	SERIE SERIES	ROSCA THREAD	Referencia Part n°	€
1/4"	8	L	M14x1.5	**86804140804**	-
3/8"	12	L	M18x1.5	**86804181206**	-
1/2"	12	L	M18x1.5	**86804181208**	-
1/2"	15	L	M22x1.5	**86804221508**	-
3/4"	18	L	M26x1.5	**86804261812**	-
3/4"	22	L	M30x2	**86804302212**	-
1"	28	L	M36x2	**86804362816**	-
1/4"	8	S	M16x1.5	**86804160804**	-
3/8"	12	S	M20x1.5	**86804201206**	-
1/2"	16	S	M24x1.5	**86804241608**	-
3/4"	25	S	M36x2	**86804362512**	-
1"	30	S	M42x2	**86804423016**	-

Hembras gir DKO90° una sola pieza rosca Métrica 24°

One piece Metric female 24° cone (90° Elbow)

90° Femelle pré-sertie Métrique cône 24°

Femmina 90° compatta Metrica sede 24°

DN	TUBO PIPE	SERIE SERIES	ROSCA THREAD	Referencia Part n°	€
1/4"	8	L	M14x1.5	**86305140804**	-
3/8"	12	L	M18x1.5	**86305181206**	-
1/2"	15	L	M22x1.5	**86305221508**	-
3/4"	22	L	M30x2	**86305302212**	-
1"	28	L	M36x2	**86305362816**	-
1/4"	8	S	M16x1.5	**86305160804**	-
3/8"	12	S	M20x1.5	**86305201206**	-
1/2"	16	S	M24x1.5	**86305241608**	-
3/4"	25	S	M36x2	**86305362512**	-
1"	30	S	M42x2	**86305423016**	-

Machos compactos rosca Métrica cono 24°

One piece Metric male 24° cone

Mâle pré-serti Métrique cône 24°

Maschio compatto Metrico sede 24°

DN	TUBO PIPE	SERIE SERIES	ROSCA THREAD	Referencia Part n°	€
1/4"	8	L	M14x1.5	**86203140804**	-
3/8"	12	L	M18x1.5	**86203181206**	-
1/2"	15	L	M22x1.5	**86203221508**	-
3/4"	22	L	M30x2	**86203302212**	-
1"	28	L	M36x2	**86203362816**	-
1/4"	8	S	M16x1.5	**86203160804**	-
3/8"	12	S	M20x1.5	**86203201206**	-
1/2"	16	S	M24x1.5	**86203241608**	-
3/4"	25	S	M36x2	**86203362512**	-
1"	30	S	M42x2	**86203423016**	-

Hembras gir DKO45° una sola pieza rosca Métrica 24°

One piece Metric female 24° cone (45° Elbow)

45° Femelle pré-sertie Métrique cône 24°

Femmina 45° compatta Metrica sede 24°

DN	TUBO PIPE	ROSCA THREAD	SERIE SERIES	Referencia Part n°	€
1/4"	8	M14x1.5	L	**86306140804**	-
3/8"	12	M18x1.5	L	**86306181206**	-
1/2"	15	M22x1.5	L	**86306221508**	-
3/4"	22	M30x2	L	**86306302212**	-
1"	28	M36x2	L	**86306362816**	-
1/4"	8	M16x1.5	S	**86306160804**	-
3/8"	12	M20x1.5	S	**86306201206**	-
1/2"	16	M24x1.5	S	**86306241608**	-
3/4"	25	M36x2	S	**86306362512**	-
1"	30	M42x2	S	**86306423016**	-

Conexiones una sola pieza PTFE Liso / R14

One piece fittings for Smooth PTFE/ R14
Embouts pré-sertis pour PTFE lisse/ R14
Raccordi compatti per PTFE liscio/ R14

Hembras giratorias rectas una sola pieza BSP (60°) doble hex

One piece double hexagonal BSP female 60° cone

Femelle pré-sertie BSP cône 60° double hexagonal

Femmina diritta compatta BSP sede 60° doppio esagono

DN	ROSCA THREAD	Referencia Part n°	€
1/4"	1/4" BSP	864000404	-
3/8"	3/8" BSP	864000606	-
1/2"	1/2" BSP	864000808	-
3/4"	3/4" BSP	864001212	-
1"	1" BSP	864001616	-

Hembras giratorias 90° una sola pieza rosca BSP cono 60°

One piece BSP female 60° cone (90° Elbow)

90° Femelle pré-sertie BSP cône 60°

Femmina 90° compatta BSP sede 60°

DN	ROSCA THREAD	Referencia Part n°	€
1/4"	1/4" BSP	861070404	-
3/8"	3/8" BSP	861070606	-
1/2"	1/2" BSP	861070808	-
1/2"	3/4" BSP NEW	861071208	-
3/4"	3/4" BSP	861071212	-
1"	1" BSP	861071616	-

Machos una sola pieza rosca cilíndrica BSP cono 60°

One piece BSP male 60° cone

Mâle pré-serti BSP cône 60°

Maschio compatto cilindrico BSP sede 60°

DN	ROSCA THREAD	Referencia Part n°	€
1/4"	1/4" BSP	861120404	-
3/8"	3/8" BSP	861120606	-
1/2"	1/2" BSP	861120808	-
3/4"	3/4" BSP	861121212	-
1"	1" BSP	861121616	-

Hembras giratorias rectas una sola pieza rosca BSP cono 60°

One piece BSP female 60° cone

Femelle pré-sertie BSP cône 60°

Femmina diritta compatta BSP sede 60°

DN	ROSCA THREAD	Referencia Part n°	€
3/16"	1/4" BSP	861000403	-
1/4"	1/4" BSP	861000404	-
3/8"	3/8" BSP	861000606	-
1/2"	1/2" BSP	861000808	-
3/4"	3/4" BSP	861001212	-
1"	1" BSP	861001616	-

Hembras giratorias 45° una sola pieza rosca BSP cono 60°

One piece BSP female 60° cone (45° Elbow)

45° Femelle pré-sertie BSP cône 60°

Femmina 45° compatta BSP sede 60°

DN	ROSCA THREAD	Referencia Part n°	€
1/4"	1/4" BSP	861080404	-
3/8"	3/8" BSP	861080606	-
1/2"	1/2" BSP	861080808	-
3/4"	3/4" BSP	861081212	-
1"	1" BSP	861081616	-

Espiga lisa una sola pieza recta gas

One piece gas standpipe

Embout pré-serti lisse droit gas

Estremitá tubolare diritta gas

TUBO PIPE	DN	Referencia Part n°	€
6.4	1/4"	861590604	-
9.5	3/8"	861590906	-
12.7	3/8"	861591206	-
12.7	1/2"	861591208	-
15.8	5/8"	861591510	-
19.05	3/4" NEW	861591912	-
25.4	1" NEW	861592516	-

Conexiones una sola pieza PTFE Corrugado

One piece fittings for convoluted PTFE
Embouts pré-sertis pour PTFE convoluté
Raccordi compatti per PTFE corrugato

Hembras giratorias rectas una sola pieza rosca JIC 37° doble hex

One piece JIC 37° double hexagonal female

Femelle pré-sertie JIC 37° double hexagonal

Femmina diritta compatta JIC 37° doppio esagono

DN	ROSCA THREAD	Referencia Part n°	€
1/4"	7/16" 20h UNF	**852420704**	-
3/8"	1/2" 20 UNF	**852420806**	-
3/8"	9/16" 18h UNF	**852420906**	-
1/2"	3/4" 16h UNF	**852421208**	-
1/2"	7/8" 14UNF	**852421408**	-
5/8"	7/8" 14UNF	**852421410**	-
5/8"	1"1/16 12 UN	**852421710**	-
3/4"	1"1/16 12h UN	**852421712**	-
1"	1"5/16 12h UN	**852422116**	-
1"1/4	1" 5/8 12h UN	**852422620**	-
1"1/2	1"7/8 12h UN	**852423024**	-
2"	2"1/2 12h UN	**852424032**	-

Hembras giratorias 90° una sola pieza rosca JIC 37°

One piece JIC 37° female (90° Elbow)

90° Femelle pré-sertie JIC 37°

Femmina 90° compatta JIC 37°

DN	ROSCA THREAD	Referencia Part n°	€
1/4"	7/16" 20h UNF	**851380704**	-
3/8"	9/16" 18h UNF	**851380906**	-
1/2"	3/4" 16h UNF	**851381208**	-
3/4"	1"1/16 12h UN	**851381712**	-
1"	1"5/16 12h UN	**851382116**	-
1"1/4	1"5/8 12h UN	**851382620**	-
1"1/2	1"7/8 12h UN	**851383024**	-
2"	2"1/2 12h UN	**851384032**	-

Machos una sola pieza rosca JIC 37°

One piece JIC 37° male

Mâle pré-serti JIC 37°

Maschio compatto JIC sede 37°

DN	ROSCA THREAD	Referencia Part n°	€
1/4"	7/16" 20h UNF	**851400704**	-
3/8"	9/16" 18h UNF	**851400906**	-
1/2"	3/4" 16h UNF	**851401208**	-
5/8"	1"1/16 12h UN	**851401710**	-
3/4"	1"1/16 12h UN	**851401712**	-
1"	1"5/16 12h UN	**851402116**	-
1"1/4	1"5/8 12h UN	**851402620**	-
1"1/2	1"7/8 12h UN	**851403024**	-
2"	2"1/2 12h UN	**851404032**	-

Hembras giratorias rectas una sola pieza rosca JIC 37°

One piece JIC 37° female

Femelle pré-sertie JIC 37°

Femmina diritta compatta JIC 37°

DN	ROSCA THREAD	Referencia Part n°	€
1/4"	7/16" 20h UNF	**851420704**	-
5/16"	1/2" 20h UNF	**851420805**	-
3/8"	9/16" 18h UNF	**851420906**	-
1/2"	3/4" 16h UNF	**851421208**	-
3/4"	1"1/16 12h UN	**851421712**	-
1"	1"5/16 12h UN	**851422116**	-
1" 1/4	1"5/8 12h UN	**851422620**	-
1"1/2	1"7/8 12h UN	**851423024**	-
2"	2" 1/2 12h UN	**851424032**	-

Hembras giratorias 45° una sola pieza rosca JIC 37°

One piece JIC 37° female (45° Elbow)

45° Femelle pré-sertie JIC 37°

Femmina 45° compatta JIC 37°

DN	ROSCA THREAD	Referencia Part n°	€
1/4"	7/16" 20h UNF	**851390704**	-
3/8"	9/16" 18h UNF	**851390906**	-
1/2"	3/4" 16h UNF	**851391208**	-
3/4"	1"1/16 12h UN	**851391712**	-
1"	1"5/16 12h UN	**851392116**	-
1"1/4	1"5/8 12h UN	**851392620**	-
1"1/2	1"7/8 12h UN	**851393024**	-
2"	2"1/2 12h UN	**851394032**	-

Conexiones una sola pieza PTFE Corrugado

One piece fittings for convoluted PTFE
Embouts pré-sertis pour PTFE convoluté
Raccordi compatti per PTFE corrugato

Hembras giratorias rectas una sola pieza rosca ORFS doble hex

One piece doble hexagonal ORFS female

Femelle pré-sertie ORFS double hexagonal

Femmina diritta compatta ORFS

DN	ROSCA THREAD	Referencia Part n°	€
1/4"	9/16"-18h	**859000904**	-
3/8"	11/16"-16h	**859001106**	-
1/2"	13/16"-16h	**859001308**	-
3/4"	1"3/16-12h	**859001912**	-
1"	1"7/16-12h	**859002316**	-
1"1/4	1" 11/16-16h	**859002720**	-
1"1/2	2" 12h	**859003224**	-

Machos una sola pieza rosca ORFS

One piece ORFS male

Mâle pré-serti ORFS

Maschio compatto ORFS

DN	ROSCA THREAD	Referencia Part n°	€
1/4"	9/16"-18h	**859120904**	-
3/8"	11/16"-16h	**859121106**	-
1/2"	13/16"-16h	**859121308**	-
3/4"	1"3/16-12h	**859121912**	-
1"	1"7/16-12h	**859122316**	-
1"1/4	1"11/16 12h	**859122720**	-
1"1/2	2" 12h	**859123224**	-

Hembras giratorias 90° una sola pieza rosca ORFS

One piece ORFS female (90° Elbow)

90° Femelle pré-sertie ORFS

Femmina 90° compatta ORFS

DN	ROSCA THREAD	Referencia Part n°	€
1/4"	9/16"-18h	**859070904**	-
3/8"	11/16"-16h	**859071106**	-
1/2"	13/16"-16h	**859071308**	-
3/4"	1"3/16-12h	**859071912**	-
1"	1"7/16-12h	**859072316**	-
1"1/4	1"11/16-16h	**859072720**	-
1"1/2	2" 12h	**859073224**	-

Hembras giratorias 45° una sola pieza rosca ORFS

One piece ORFS female (45° Elbow)

45° Femelle pré-sertie ORFS

Femmina 45° compatta ORFS

DN	ROSCA THREAD	Referencia Part n°	€
1/4"	9/16"-18h	**859080904**	-
3/8"	11/16"-16h	**859081106**	-
1/2"	13/16"-16h	**859081308**	-
3/4"	1"3/16-12h	**859081912**	-
1"	1"7/16-12h	**859082316**	-
1"1/4	1"11/16-16h	**859082720**	-
1"1/2	2" 12h	**859083224**	-

Conexiones una sola pieza PTFE Corrugado

One piece fittings for convoluted PTFE
Embouts pré-sertis pour PTFE convoluté
Raccordi compatti per PTFE corrugato

Hembras gir rectas una sola pieza NPSM (60°) doble hex

One piece double hexagonal NPSM female 60° cone

Femelle pré-sertie NPSM cône 60° double hexagonal

Femmina diritta compatta NPSM sede 60° doppio esagono

DN	ROSCA THREAD	Referencia Part n°	€
1/4"	1/4" NPSM	**853610404**	-
3/8"	3/8" 18h NPSM	**853610606**	-
1/2"	1/2" 14h NPSM	**853610808**	-
3/4"	3/4" NPSM	**853611212**	-
1"	1" - 11 1/2 h NPSM	**853611616**	-

Hembras giratorias rectas una sola pieza rosca NPSM cono 60°

One piece NPSM female 60° cone

Femelle pré-sertie NPSM cône 60°´

Femmina diritta compatta NPSM sede 60°

DN	ROSCA THREAD	Referencia Part n°	€
1/4"	1/4" 18h NPSM	**852610404**	-
3/8"	3/8" 18h NPSM	**852610606**	-
1/2"	1/2" 14h NPSM	**852610808**	-
3/4"	3/4" 14h NPSM	**852611212**	-
1"	1" - 11 1/2 h NPSM	**852611616**	-

Hembras giratorias 90° una sola pieza rosca NPSM cono 60°

One piece NPSM female 60° cone (90° Elbow)

90° Femelle pré-sertie NPSM cône 60°

Femmina 90° compatta NPSM sede 60°

DN	ROSCA THREAD	Referencia Part n°	€
1/4"	1/4" 18h NPSM	**852620404**	-
3/8"	3/8" 18h NPSM	**852620606**	-
1/2"	1/2" 14h NPSM	**852620808**	-
3/4"	3/4" 14h NPSM	**852621212**	-
1"	1" - 11 1/2 h NPSM	**852621616**	-

Hembras giratorias 45° una sola pieza rosca NPSM cono 60°

One piece NPSM female 60° cone (45° Elbow)

45° Femelle pré-sertie NPSM cône 60°

Femmina 45° compatta NPSM sede 60°

DN	ROSCA THREAD	Referencia Part n°	€
1/4"	1/4" 18h NPSM	**852630404**	-
3/8"	3/8" 18h NPSM	**852630606**	-
1/2"	1/2" 14h NPSM	**852630808**	-
3/4"	3/4" 14h NPSM	**852631212**	-
1"	1" - 11 1/2 h NPSM	**852631616**	-

Machos una sola pieza rosca cónica NPT

One piece NPT male pipe straight

Mâle pré-serti NPT

Maschio compatto conico NPT

DN	ROSCA THREAD	Referencia Part n°	€
1/4"	1/8" NPT	**851610204**	-
1/4"	1/4" NPT	**851610404**	-
5/16"	1/4" NPT	**851610405**	-
3/8"	1/4" NPT	**851610406**	-
1/4"	3/8" NPT	**851610604**	-
5/16"	3/8" NPT	**851610605**	-
3/8"	3/8" NPT	**851610606**	-
1/2"	3/8" NPT	**851610608**	-
3/8"	1/2" NPT	**851610806**	-
1/2"	1/2" NPT	**851610808**	-
5/8"	1/2" NPT	**851610810**	-
1/2"	3/4" NPT	**851611208**	-
5/8"	3/4" NPT	**851611210**	-
3/4"	3/4" NPT	**851611212**	-
3/4"	1" NPT	**851611612**	-
1"	1" NPT	**851611616**	-
1"	1"1/4 NPT	**851612016**	-
1"1/4	1"1/4 NPT	**851612020**	-
1"1/2	1"1/2 NPT	**851612424**	-
2"	2" NPT	**851613232**	-

Conexiones una sola pieza PTFE Corrugado

One piece fittings for convoluted PTFE
Embouts pré-sertis pour PTFE convoluté
Raccordi compatti per PTFE corrugato

Hembras gir DKO rectas una sola pieza rosca Métrica cono 24°

One piece Metric female 24° cone

Femelle pré-sertie Métrique cône 24°

Femmina diritta compatta Metrica sede 24°

DN	TUBO PIPE	SERIE SERIES	ROSCA THREAD	Referencia Part n°	€
1/4"	8	L	M14x1.5	**85804140804**	-
3/8"	12	L	M18x1.5	**85804181206**	-
1/2"	15	L	M22x1.5	**85804221508**	-
3/4"	22	L	M30x2	**85804302212**	-
1"	28	L	M36x2	**85804362816**	-
1"1/4	35	L	M45x2	**85804453520**	-
1"1/2	42	L	M52x2	**85804524224**	-
1/4"	8	S	M16x1.5	**85804160804**	-
3/8"	12	S	M20x1.5	**85804201206**	-
1/2"	16	S	M24x1.5	**85804241608**	-
3/4"	25	S	M36x2	**85804362512**	-
1"	30	S	M42x2	**85804423016**	-
1"1/4	38	S	M52x2	**85804523820**	-

Machos una sola pieza rosca Métrica cono 24°

One piece Metric male 24° cone

Mâle pré-serti Métrique cône 24°

Maschio compatto Metrico sede 24°

DN	TUBO PIPE	SERIE SERIES	ROSCA THREAD	Referencia Part n°	€
1/4"	8	L	M14x1.5	**85203140804**	-
3/8"	12	L	M18x1.5	**85203181206**	-
1/2"	15	L	M22x1.5	**85203221508**	-
3/4"	22	L	M30x2	**85203302212**	-
1"	28	L	M36x2	**85203362816**	-
1"1/4	35	L	M45x2	**85203453520**	-
1"1/2	42	L	M52x2	**85203524224**	-
1/4"	8	S	M16x1.5	**85203160804**	-
3/8"	12	S	M20x1.5	**85203201206**	-
1/2"	16	S	M24x1.5	**85203241608**	-
3/4"	25	S	M36x2	**85203362512**	-
1"	30	S	M42x2	**85203423016**	-
1"1/4	38	S	M52x2	**85203523820**	-

Hembras gir DKO 90° una sola pieza rosca Métrica cono 24°

One piece Metric female 24° cone (90° Elbow)

90° Femelle pré-sertie Métrique cône 24°

Femmina 90° compatta Metrica sede 24°

DN	TUBO PIPE	ROSCA THREAD	SERIE SERIES	Referencia Part n°	€
1/4"	8	M14x1.5	L	**85305140804**	-
3/8"	12	M18x1.5	L	**85305181206**	-
1/2"	15	M22x1.5	L	**85305221508**	-
3/4"	22	M30x2	L	**85305302212**	-
1"	28	M36x2	L	**85305362816**	-
1"1/4	35	M45x2	L	**85305453520**	-
1"1/2	42	M52x2	L	**85305524224**	-
1/4"	8	M16x1.5	S	**85305160804**	-
3/8"	12	M20x1.5	S	**85305201206**	-
1/2"	16	M24x1.5	S	**85305241608**	-
3/4"	25	M36x2	S	**85305362512**	-
1"	30	M42x2	S	**85305423016**	-
1"1/4	38	M52x2	S	**85305523820**	-

Hembras gir DKO 45° una sola pieza rosca Métrica cono 24°

One piece Metric female 24° cone (45° Elbow)

45° Femelle pré-sertie Métrique cône 24°

Femmina 45° compatta Metrica sede 24°

DN	TUBO PIPE	SERIE SERIES	ROSCA THREAD	Referencia Part n°	€
1/4"	8	L	M14x1.5	**85306140804**	-
3/8"	12	L	M18x1.5	**85306181206**	-
1/2"	15	L	M22x1.5	**85306221508**	-
3/4"	22	L	M30x2	**85306302212**	-
1"	28	L	M36x2	**85306362816**	-
1"1/4	35	L	M45x2	**85306453520**	-
1"1/2	42	L	M52x2	**85306524224**	-
1/4"	8	S	M10x1.5	**85306160804**	-
3/8"	12	S	M20x1.5	**85306201206**	-
1/2"	16	S	M24x1.5	**85306241608**	-
3/4"	25	S	M36x2	**85306362512**	-
1"	30	S	M42x2	**85306423016**	-
1"1/4	38	S	M52x2	**85306523820**	-

Conexiones una sola pieza PTFE Corrugado

One piece fittings for convoluted PTFE
Embouts pré-sertis pour PTFE convoluté
Raccordi compatti per PTFE corrugato

Hembras giratorias rectas una sola pieza rosca BSP (60°) doble hex

One piece double hexagonal BSP female 60° cone

Femelle pré-sertie BSP cône 60° double hexagonal

Femmina diritta compatta BSP sede 60° doppio esagono

DN	ROSCA THREAD	Referencia Part n°	€
1/4"	1/4" BSP	**854000404**	-
3/8"	3/8" BSP	**854000606**	-
1/2"	1/2" BSP	**854000808**	-
3/4"	3/4" BSP	**854001212**	-
1"	1" BSP	**854001616**	-
1"1/4	1"1/4 BSP	**854002020**	-
1"1/2	1"1/2 BSP	**854002424**	-
2"	2" BSP	**854003232**	-

Hembras giratorias rectas una sola pieza rosca BSP cono 60°

One piece BSP female 60° cone

Femelle pré-sertie BSP cône 60°

Femmina diritta compatta BSP sede 60°

DN	ROSCA THREAD	Referencia Part n°	€
1/4"	1/4" BSP	**851000404**	-
3/8"	3/8" BSP	**851000606**	-
1/2"	1/2" BSP	**851000808**	-
3/4"	3/4" BSP	**851001212**	-
1"	1" BSP	**851001616**	-
1"1/4	1"1/4 BSP	**851002020**	-
1"1/2	1"1/2 BSP	**851002424**	-
2"	2" BSP	**851003232**	-

Hembras giratorias 90° una sola pieza rosca BSP cono 60°

One piece BSP female 60° cone (90° Elbow)

90° Femelle pré-sertie BSP cône 60°

Femmina 90° compatta BSP sede 60°

DN	ROSCA THREAD	Referencia Part n°	€
1/4"	1/4" BSP	**851070404**	-
3/8"	3/8" BSP	**851070606**	-
1/2"	1/2" BSP	**851070808**	-
3/4"	3/4" BSP	**851071212**	-
1"	1" BSP	**851071616**	-
1"1/4	1"1/4 BSP	**851072020**	-
1"1/2	1"1/2 BSP	**851072424**	-
2"	2" BSP	**851073232**	-

Hembras giratorias 45° una sola pieza rosca BSP cono 60°

One piece BSP female 60° cone (45° Elbow)

45° Femelle pré-sertie BSP cône 60°

Femmina 45° compatta BSP sede 60°

DN	ROSCA THREAD	Referencia Part n°	€
1/4"	1/4" BSP	**851080404**	-
3/8"	3/8" BSP	**851080606**	-
1/2"	1/2" BSP	**851080808**	-
3/4"	3/4" BSP	**851081212**	-
1"	1" BSP	**851081616**	-
1"1/4	1"1/4 BSP	**851082020**	-
1"1/2	1"1/2 BSP	**851082424**	-
2"	2" BSP	**851083232**	-

Machos una sola pieza rosca cilíndrica BSP cono 60°

One piece BSP male 60° cone

Mâle pré-serti BSP cône 60°

Maschio compatto cilindrico BSP sede 60°

DN	ROSCA THREAD	Referencia Part n°	€
1/4"	1/4" BSP	**851120404**	-
3/8"	3/8" BSP	**851120606**	-
1/2"	1/2" BSP	**851120808**	-
3/4"	3/4" BSP	**851121212**	-
1"	1" BSP	**851121616**	-
1"1/4	1"1/4 BSP	**851122020**	-
1"1/2	1"1/2 BSP	**851122424**	-
2"	2" BSP	**851123232**	-

Conexiones Reusables

Reusable series
Embouts série récupérable
Serie Recuperabile

Hembras giratorias rectas una sola pieza R2T rosca JIC 37°

One Piece Swivel Female R2AT JIC 37°

Femelle tournante 1 piéce R2AT JIC 37°

Femmina compatta JIC 37° - R2AT

DN	ROSCA THREAD	Referencia Part n°	€
1/4"	716" 20h UNF	**Z3J-07-04-R2T**	-
3/8"	9/16" 18h UNF	**Z3J-09-06-R2T**	-
1/2"	3/4" 16h UNF	**Z3J-12-08-R2T**	-
1/2"	7/8" 14h UNF	**Z3J-14-08-R2T**	-
5/8"	7/8" 14h UNF	**Z3J-14-10-R2T**	-
3/4"	1"1/16 12h UNF	**Z3J-17-12-R2T**	-
1"	1" 5/16 12h UNF	**Z3J-21-16-R2T**	-

Machos una sola pieza R2T rosca cónica NPT

One Piece Male R2AT NPT

Mâle1piéce 2AT NPT

Maschio compatto NPT - R2AT

DN	ROSCA THREAD	Referencia Part n°	€
1/4"	1/4" NPT	**Z2NPT-04-04-R2T**	-
3/8"	3/8" NPT	**Z2NPT-06-06-R2T**	-
1/2"	1/2" NPT	**Z2NPT-08-08-R2T**	-
3/4"	3/4" NPT	**Z2NPT-12-12-R2T**	-
1"	1" NPT	**Z2NPT-16-16-R2T**	-

Casquillos reus para manguera R1T/1SN no pelar

Reusable ferrules R1T/1SN non skive

Jupes récuperables R1T/1SN sans dénudage

Boccola recuperabile per R1T senza pelatura

DN	Referencia Part n°	€
1/4"	**Z1G-4 R1T INOX**	-
5/16"	**Z1G-5 R1T INOX**	-
3/8"	**Z1G-6 R1T INOX**	-
1/2"	**Z1G-8 R1T INOX**	-
3/4"	**Z1G-12 R1T INOX**	-
1"	**Z1G-16 R1T INOX**	-

Casquillos reus para manguera R2AT/2SN no pelar

Reusable ferrules R2AT/2SN non skive

Jupes récuperables R2AT/2SN sans dénudage

Boccola recuperabile per R2AT/2SN senza pelatura

DN	Referencia Part n°	€
1/4"	**Z1G-4 R2T INOX**	-
3/8"	**Z1G-6 R2T INOX**	-
1/2"	**Z1G-8 R2T INOX**	-
5/8"	**Z1G-10 R2T INOX**	-
3/4"	**Z1G-12 R2T INOX**	-
1"	**Z1G-16 R2T INOX**	-

Hembras giratorias rectas reusables rosca BSP cono 60°

Reusable BSP Swivel female 60° cone

Femelle récuperable gaz cylindrique 60°

Femmina diritta BSP sede 60° recuperabile

DN	ROSCA THREAD	Referencia Part n°	€
1/4"	1/4" BSP	**Z3G-4**	-
5/16"	3/8" BSP	**Z3G-6-5**	-
3/8"	3/8" BSP	**Z3G-6**	-
3/8"	1/2" BSP	**Z3G-8-6**	-
1/2"	1/2" BSP	**Z3G-8**	-
3/4"	3/4" BSP	**Z3G-12**	-
1"	1" BSP	**Z3G-16**	-
1"1/4	1"1/4 BSP	**Z3G-20**	-
1"1/2	1"1/2 BSP	**Z3G-24***	-

* **Hasta fin de existencias** / *Until end of stock* / Jusqu´à la fin du stock / *Fino ad esaurimento*

Hembras giratorias 90° reusables rosca BSP cono 60°

Reusable BSP 60° cone (90° Elbow)

Coude 90° femelle récuperable gaz cylindrique BSP 60°

Femmina 90° BSP sede 60° recuperabile

DN	ROSCA THREAD	Referencia Part n°	€
1/4"	1/4" BSP	**Z90G-4**	-
3/8"	3/8" BSP	**Z90G-6**	-
3/8"	1/2" BSP	**Z90G-8-6**	-
1/2"	1/2" BSP	**Z90G-8**	-
3/4"	3/4" BSP	**Z90G-12**	-
1"	1" BSP	**Z90G-16**	-

Machos reusables rosca cilíndrica BSP cono 60°

Reusable BSP Male parallel 60° cone

Mâle récuperable gaz cylindrique BSP 60°

Maschio BSP cilindrico sede 60° recuperabile

DN	ROSCA THREAD	Referencia Part n°	€
1/4"	1/4" BSP	**Z2G-4**	-
3/8"	3/8" BSP	**Z2G-6-5**	-
3/8"	3/8" BSP	**Z2G-6**	-
3/8"	1/2" BSP	**Z2G-8-6**	-
1/2"	1/2" BSP	**Z2G-8**	-
3/4"	3/4" BSP	**Z2G-12**	-
1"	1" BSP	**Z2G-16**	-

Conexiones Reusables

Reusable series
Embouts série récupérable
Serie Recuperabile

Hembras giratorias rectas reusables rosca JIC cono 37°

Reusable JIC 37° straight Swivel female

Femelle droite récuperable JIC 37°

Femmina diritta JIC sede 37° recuperabile

DN	ROSCA THREAD	Referencia Part n°	€
1/4"	7/16" 20h UNF	**Z3J-07-04**	-
3/8"	9/16" 18h UNF	**Z3J-09-06**	-
1/2"	3/4" 16h UNF	**Z3J-12-08**	-
1/2"	7/8" 14h UNF	**Z3J-14-08**	-
5/8"	7/8" 14h UNF	**Z3J-14-10**	-
3/4"	1"1/16 12h UNF	**Z3J-17-12**	-
1"	1"5/16 12h UNF	**Z3J-21-16**	-

Machos reusables rosca JIC cono 37°

Reusable JIC Male 37° cone

Mâle récuperables JIC cône 37°

Maschio JIC 37° recuperabile

DN	ROSCA THREAD	Referencia Part n°	€
1/4"	7/16" 20h UNF	**Z2J-07-04**	-
3/8"	9/16" 18h UNF	**Z2J-09-06**	-
1/2"	3/4" 16h UNF	**Z2J-12-08**	-
1/2"	7/8" 14h UNF	**Z2J-14-08**	-
5/8"	7/8" 14h UNF	**Z2J-14-10**	-
3/4"	1"1/16 12h UNF	**Z2J-17-12**	-
1"	1" 5/16 12h UNF	**Z2J-21-16**	-

Hembras giratorias 90° reusables rosca JIC cono 37°

90° reusable Swivel female thread JIC cone 37 °

Femelle tournante 90° filetage récuperable cône JIC 37 °

Femmina 90° JIC 37° recuperabile

DN	ROSCA THREAD	Referencia Part n°	€
1/4"	7/16" 20h UNF	**Z3J90-07-04**	-
3/8"	9/16" 18h UNF	**Z3J90-09-06**	-
1/2"	3/4" 16h UNF	**Z3J90-12-08**	-
1/2"	7/8" 14h UNF	**Z3J90-14-08**	-
5/8"	7/8" 14h UNF	**Z3J90-14-10**	-
3/4"	1"1/16 12h UN	**Z3J90-17-12**	-
1"	1"5/16 12h UN	**Z3J90-21-16**	-

Hembras giratorias 45° reusables rosca JIC cono 37°

45° reusable Swivel female thread JIC cone 37 °

Femelle tournante 45° filetage récuperable cône JIC 37 °

Femmina 45° JIC 37° recuperabile

DN	ROSCA THREAD	Referencia Part n°	€
1/4"	7/16" 20h UNF	**Z3J45-07-04**	-
3/8"	9/16" 18h UNF	**Z3J45-09-06**	-
1/8"	3/4" 16h UNF	**Z3J45-12-08**	-
1/2"	7/8" 14h UNF	**Z3J45-14-08**	-
5/8"	7/8" 14h UNF	**Z3J45-14-10**	-
3/4"	1"1/16 12h UN	**Z3J45-17-12**	-
1"	1"5/16 12h UN	**Z3J45-21-16**	-

Machos reusables rosca NPT

Reusable NPT Male

Mâle récuperable NPT

Maschio NPT recuperabile

DN	ROSCA THREAD	Referencia Part n°	€
1/4	1/4" NPT	**Z2NPT-04-04**	-
3/8	3/8" NPT	**Z2NPT-06-06**	-
1/2	1/2" NPT	**Z2NPT-08-08**	-
3/4	3/4" NPT	**Z2NPT-12-12**	-
1"	1" NPT	**Z2NPT-16-16**	-

Espigas lisas Métricas reusables

Reusable Metric standpipe

Embout lisse récuperable Métrique

Estremitá tubolare recuperabile

DN	TUBO PIPE	Referencia Part n°	€
1/4"	6	**ZE-6-4**	-
1/4"	8	**ZE-8-4**	-
3/8"	8	**ZE-8-6**	-
1/4"	10	**ZE-10-4**	-
5/16"	10	**ZE-10-5**	-
3/8"	10	**ZE-10-6**	-
5/16"	12	**ZE-12-5**	-
3/8"	12	**ZE-12-6**	-
3/8"	15	**ZE-15-6**	-
1/2"	15	**ZE-15-8**	-
1/2"	16	**ZE-16-8**	-
3/4"	22	**ZE-22-12**	-
3/4"	25	**ZE-25-12**	-
1"	25	**ZE-25-16**	-
1"	28	**ZE-28-16**	-
1"	30	**ZE-30-16**	-

***Consultar /** On request **/ Sur demande /** Su richiesta

Conexiones Reusables

Reusable series
Embouts série récupérable
Serie Recuperabile

Hembras giratorias rectas reusables R5 rosca JIC cono 37°

Reusable R5 JIC 37 ° straight swivel female

Femelle pivotante droite réutilisable R5 JIC filetage 37 ° cône

Femmina diritta compatta recuperabile JIC 37° - R5

DN	ROSCA THREAD	Referencia Part n°	€
3/16"	7/16" 20 UNF	**Z3J-07-04-R5**	-
1/4"	7/16" 20h UNF	**Z3J-07-05-R5**	-
1/4"	1/2" 20h UNF	**Z3J-08-05-R5**	-
5/16"	1/2" 20h UNF	**Z3J-08-06-R5**	-
5/16"	9/16" 18h UNF	**Z3J-09-06-R5**	-
13/32"	3/4" 16h UNF	**Z3J-12-08-R5**	-
1/2"	3/4" 16h UNF	**Z3J-12-10-R5**	-
1/2"	7/8"x14 UNF	**Z3J-14-10-R5**	-
5/8"	1" 1/16" 12 UNF	**Z3J-17-12-R5**	-
7/8"	1" 5/16" 12 UNF	**Z3J-21-16-R5**	-
1"1/8	1" 5/8 12 UNF	**Z3J-26-20-R5**	-
1"3/8	1" 7/8 12 UNF	**Z3J-30-24-R5**	-
1"13/16	2" 1/2 12UNF	**Z3J-40-32-R5**	-

Hembras giratorias 90° reusables R5 rosca JIC cono 37°

Reusable R5 JIC 37 ° swivel female (90° elbow)

Femelle pivotante 90° filetage R5 réutilisable cône JIC 37 °

Femmina 90° compatta recuperabile JIC 37° - R5

DN	ROSCA THREAD	Referencia Part n°	€
3/16"	7/16" 20 UNF	**Z3J90-07-04-R5**	-
1/4"	7/16" 20h UNF	**Z3J90-07-05-R5**	-
1/4"	1/2" 20h UNF	**Z3J90-08-05-R5**	-
5/16"	9/16" 18h UNF	**Z3J90-09-06-R5**	-
13/32"	3/4" 16h UNF	**Z3J90-12-08-R5**	-
1/2"	3/4" 16h UNF	**Z3J90-12-10-R5**	-
1/2"	7/8" 14 UNF	**Z3J90-14-10-R5**	-
5/8"	1" 1/16 12 UNF	**Z3J90-17-12-R5**	-
7/8"	1" 5/16" 12 UNF	**Z3J90-21-16-R5**	-

Machos reusables R5 rosca NPT

Reusable R5 NPT Male

Mâle récuperables R5 NPT

Maschio NPT recuperabile - R5

DN	ROSCA THREAD	Referencia Part n°	€
3/16"	1/4" NPT	**Z2P-04-04-R5**	-
1/4"	1/4" NPT	**Z2P-04-05-R5**	-
5/16"	3/8" NPT	**Z2P-06-06-R5**	-
13/32"	1/2" NPT	**Z2P-08-08-R5**	-
1/2"	1/2" NPT	**Z2P-08-10-R5**	-
5/8"	3/4" NPT	**Z2P-12-12-R5**	-
7/8"	1" NPT	**Z2P-16-16-R5**	-
1" 1/8	1" 1/4 NPT	**Z2P-20-20-R5**	-
1" 3/8	1" 1/2 NPT	**Z2P-24-24-R5**	-
1" 13/16	2" NPT	**Z2P-32-32-R5**	-

Hembras giratorias 45° reusables R5 rosca JIC cono 37°

Reusable R5 JIC 37 ° swivel female (45° elbow)

Femelle pivotante 45° réutilisable Filetage R5 cône JIC 37 °

Femmina 45° compatta recuperabile JIC 37° - R5

DN	ROSCA THREAD	Referencia Part n°	€
3/16"	7/16" 20 UNF	**Z3J45-07-04-R5**	-
1/4"	7/16" 20h UNF	**Z3J45-07-05-R5**	-
1/4"	1/2" 20h UNF	**Z3J45-08-05-R5**	-
5/16"	9/16" 18h UNF	**Z3J45-09-06-R5**	-
13/32"	3/4" 16h UNF	**Z3J45-12-08-R5**	-
1/2"	3/4" 16h UNF	**Z3J45-12-10-R5**	-
1/2"	7/8" 14 UNF	**Z3J45-14-10-R5**	-
5/8"	1" 1/16 12 UNF	**Z3J45-17-12-R5**	-
7/8"	1" 5/16" 12 UNF	**Z3J45-21-16-R5**	-

CONEXIONES REUSABLES R5

REUSABLE R5 FITTINGS

Consulta datos en nuestra ficha técnica | Check our technical sheet for data

Sistemas hidráulicos de **media presión** con fluidos basados en petróleo o agua/ glycol, aceites y lubricantes.

Medium pressure *hydraulic systems with petroleum or water/glycol based fluids and for fuel and lubricating oils*

Conexiones Push-On

Push-On Fittings
Embouts Push-On
Raccordi Serie Push-On

Hembras giratorias rectas rosca BSP cono 60°

BSP Swivel female 60° cone

Femelle tournante BSP cône 60°

Femmina diritta BSP sede 60° Push-On

DN	ROSCA THREAD	Referencia Part n°	€
1/4"	1/4" BSP	**891000404**	-
3/8"	3/8" BSP	**891000606**	-
1/2"	1/2" BSP	**891000808**	-
5/8"	5/8" BSP	**891001010**	-
3/4"	3/4" BSP	**891001212**	-
1"	1" BSP	**891001616**	-

Machos rosca cilíndrica BSP cono 60°

BSP Male 60° cone

Mâle fixe BSP cône 60°

Maschio cilindrico BSP sede 60° Push-On

DN	ROSCA THREAD	Referencia Part n°	€
1/4"	1/4" BSP	**891120404**	-
3/8"	3/8" BSP	**891120606**	-
1/2"	1/2" BSP	**891120808**	-
3/4"	1/2" BSP	**891120812**	-
5/8"	5/8" BSP	**891121010**	-
3/4"	3/4" BSP	**891121212**	-
1"	1" BSP	**891121616**	-

Hembras giratorias rectas JIC 37°

JIC 37° Swivel female

Femelle tournante JIC 37°

Femmina diritta JIC sede 37° Push-On

DN	ROSCA THREAD	Referencia Part n°	€
1/4"	7/16" 20h UNF	**891420704**	-
3/8"	9/16" 18h UNF	**891420906**	-
1/2"	3/4" 16h UNF	**891421208**	-
5/8"	7/8" 14h UNF	**891421410**	-
3/4"	1"1/16 12h UN	**891421712**	-
1"	1"5/16 12h UN	**891422116**	-

Machos rosca JIC cono 37°

JIC 37° Male

Mâle fixe JIC 37°

Maschio JIC sede 37° Push-On

DN	ROSCA THREAD	Referencia Part n°	€
1/4"	7/16" 20h UNF	**891400704**	-
3/8"	9/16" 18h UNF	**891400906**	-
1/2"	3/4" 16h UNF	**891401208**	-
5/8"	7/8" 14h UNF	**891401410**	-
3/4"	1"1/16 12h UN	**891401712**	-
1"	1"5/16 12h UN	**891402116**	-

Machos rosca cónica NPT

NPT Male pipe straight

Mâle gaz conique NPT (BRIGGS)

Maschio conico NPT Push-On

DN	ROSCA THREAD	Referencia Part n°	€
1/4"	1/4" NPT	**891610404**	-
3/8"	3/8" NPT	**891610606**	-
1/2"	1/2" NPT	**891610808**	-
3/4"	3/4" NPT	**891611212**	-
1"	1" NPT	**891611616**	-

Hembra giratoria recta Métrica cono 24°

Metric female swivel with o´ring 24° cone

Femelle Métrique avec o´ring cône 24°

Femmina metrica sede 24°+O´ring Push-On

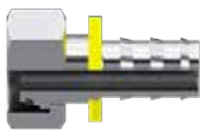

DN	TUBO PIPE	SERIE SERIES	ROSCA THREAD	Referencia Part n°	€
1/4"	6	L	M12x1.5	**89804120604**	-
1/4"	8	L	M14x1.5	**89804140804**	-
1/4"	10	L	M16x1.5	**89804161004**	-
3/8"	12	L	M18x1.5	**89804181206**	-
1/2"	15	L	M22x1.5	**89804221508**	-
3/4"	22	L	M30x2	**89804302212**	-

Machos rosca métrica cono 24°

Metric stud 24° cone

Mâle Métrique cône 24°

Maschio metrico sede 24° Push-On

DN	TUBO PIPE	SERIE SERIES	ROSCA THREAD	Referencia Part n°	€
1/4"	8	L	M14x1.5	**89203140804**	-
1/4"	10	L	M16x1.5	**89203161004**	-
3/8"	12	L	M18x1.5	**89203181206**	-
1/2"	15	L	M22x1.5	**89203221508**	-
3/4"	22	L	M30x2	**89203302212**	-

Conexiones Alta Presión (700 bar)

High pressure 700 bar fittings
Embouts haute pression 700 bar
Raccordi Altissima pressione (700 bar)

Casquillos para alta presión (700bar)

Ferrules for thermoplastic hose 700 bar

Jupes à sertir thermoplastique 700 bar

Boccole per tubo termoplastico 700 bar

DN	Referencia Part n°	€
1/4"	**Z710120400**	-
3/8"	**Z710120600**	-
1/2"	**Z710120800**	-

Hembra giratoria BSP cono 60° (700bar)

BSP Swivel female 60° cone 700 bar

Embout 700 bar femelle tournante gaz cyl BSP 60°

Femmina diritta BSP sede 60° 700 bar

DN	ROSCA THREAD	Referencia Part n°	€
1/4"	1/4" BSP	**Z741000404**	-
3/8"	3/8" BSP	**Z741000606**	-
1/2"	1/2" BSP	**Z741000808**	-

Macho BSP cono 60° (700bar)

BSP Male parallel 60° cone 700 bar

Embout 700 bar mâle fixe gaz cyl BSP 60°

Maschio cilindrico BSP sede 60° 700 bar

DN	ROSCA THREAD	Referencia Part n°	€
1/4"	1/4" BSP	**Z741120404**	-
3/8"	3/8" BSP	**Z741120606**	-
1/2"	1/2" BSP	**Z741120808**	-

Hembra giratoria NPSM cono 60° (700bar)

NPSM Swivel female 60° cone 700 bar

Embout 700 bar femelle tournante NPSM 60°

Femmina diritta NPSM sede 60° 700 bar

DN	ROSCA THREAD	Referencia Part n°	€
1/4"	1/4" 18h NPSM	**Z742610404**	-
3/8"	3/8" 18h NPSM	**Z742610606**	-
1/2"	1/2" 14h NPSM	**Z742610808**	-

Macho NPT (700bar)

NPT Male pipe straight 700 bar

Embout 700 bar mâle fixe gaz conique NPT

Maschio conico NPT 700 bar

DN	ROSCA THREAD	Referencia Part n°	€
1/4"	1/4" NPT	**Z741610404**	-
1/4"	3/8" NPT	**Z741610604**	-
3/8"	3/8" NPT	**Z741610606**	-
1/2"	1/2" NPT	**Z741610808**	-

Hembra giratoria JIC 37° (700bar)

JIC 37° Swivel female 700 bar

Embout 700 bar femelle tournante droit JIC 37°

Femmina JIC 37° 700 bar

DN	ROSCA THREAD	Referencia Part n°	€
1/4"	7/16" 20h UNF	**Z741420704**	-
1/4"	9/16" 18h UNF	**Z741420904**	-
3/8"	9/16" 18h UNF	**Z741420906**	-
1/2"	3/4" 16h UNF	**Z741421208**	-

Macho JIC 37° (700bar)

JIC 37° Male thread 700 bar

Embout 700 bar mâle fixe JIC 37°

Maschio JIC 37° 700 bar

DN	ROSCA THREAD	Referencia Part n°	€
1/4"	7/16" 20h UNF	**Z741400704**	-
3/8"	9/16" 18h UNF	**Z741400906**	-
1/2"	3/4" 16h UNF	**Z741401208**	-

Hembra giratoria Métrica 24° (700bar)

Metric Swivel female 24° cone 700 bar

Embout 700 bar femelle tournante droit Métrique cône 24°

Femmina diritta Metrica sede 24° 700 bar

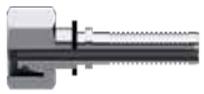

DN	TUBO PIPE	SERIE SERIES	ROSCA THREAD	Referencia Part n°	€
1/4"	8	S	M16x1.5	**Z74804160804**	-
3/8"	12	S	M20x1.5	**Z74804201206**	-
1/2"	16	S	M24x1.5	**Z74804241608**	-

Macho Métrico 24° (700bar)

Metric Male 24° cone 700 bar

Embout 700 bar mâle fixe Métrique cône 24°

Maschio metrico sede 24° 700 bar

DN	TUBO PIPE	SERIE SERIES	ROSCA THREAD	Referencia Part n°	€
1/4"	8	S	M16x1.5	**Z74203160804**	-
3/8"	12	S	M20x1.5	**Z74203201206**	-
1/2"	16	S	M24x1.5	**Z74203241608**	-

TABLAS-PRENSADO-CERTIFICADOS
CHARTS-CRIMPING-CERTIFICATES

Certificado de Material Material Certificate

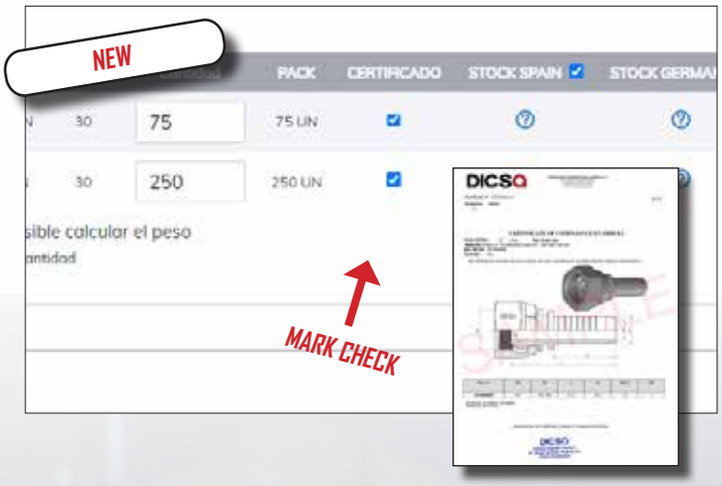

Certificados de Calidad Quality Certificates

Tablas De Prensado Crimping Charts

Formularios De Hidráulica Hydraulic Forms

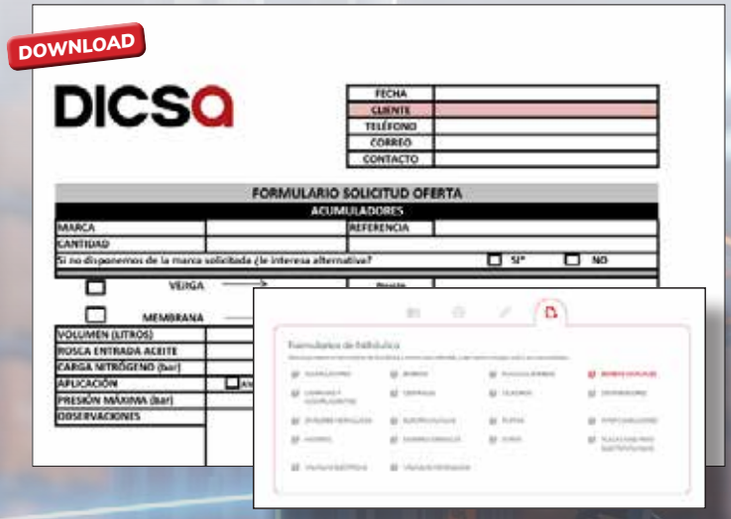

Catálogos Interactivos Price Lists And Leaflets

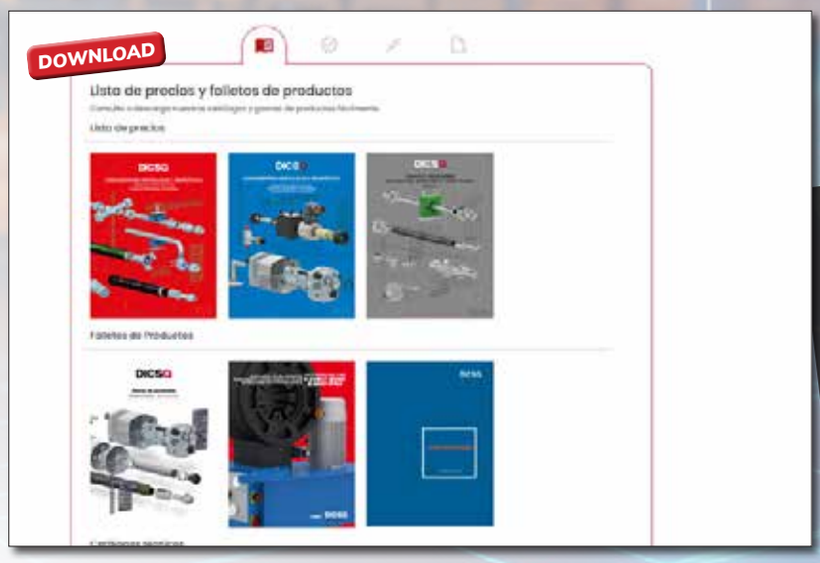

TODA LA INFORMACIÓN EN UN ¡CLICK!

ALL THE INFORMATION WITH JUST ONE

www.dicsaes.com

DICSA

ASISTENTE DE LATIGUILLOS
HOSE CONFIGURATOR

Makes your work easier

Evitar errores de configuración, nunca fue tan fácil.

Prevent configuration mistakes, it's never been easier

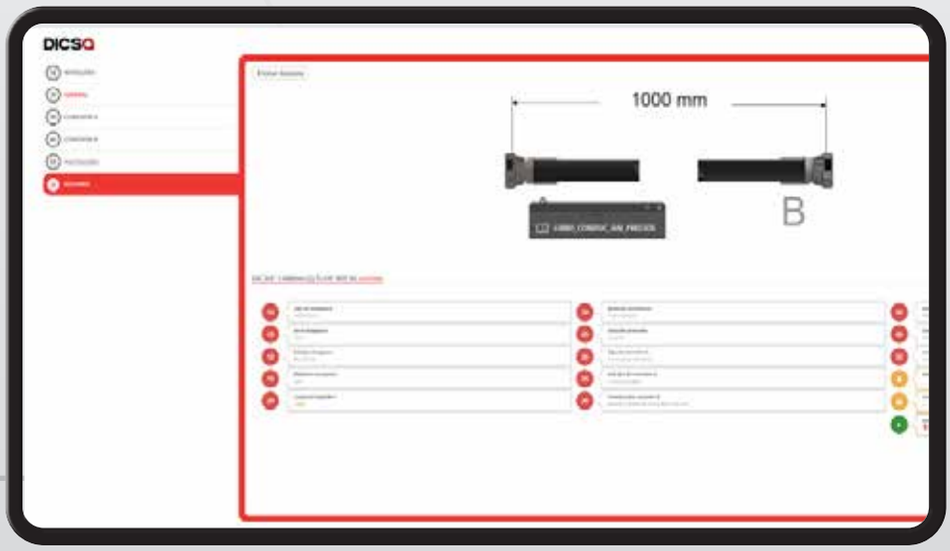

Elige la manguera
Choose the hose

Selecciona las conexiones
Select the fittings

Elige las protecciones
Choose the protections

PEDIDO FINAL
ORDER

Pongase en contacto con nosotros para más información.

Contact us for further information.

www.dicsaes.com

CRIMPING MACHINES

Prensas
Pressen
Presses

MANGUERA HIDRÁULICA · HYDRAULIC HOSES

MANUALES · MANUAL

PM 18 6J N

80 T | +20 mm | 59 mm | 28 kg.

1" *2SP*
3/4" *4SP*
1/2" *6SP*

PM16-8J

100 T | +20 mm | 59 mm | 25 kg.

1" *3SP*

PM16 ELBOW-8J

100 T | +20 mm | 59 mm | 25 kg.

1" *3SP*

die set

PM16-SPEED-8J

100 T | +20 mm | 59 mm | 25 kg.

1" *3SP*

PM18F-9J

120 T | +20 mm | 65 mm | 22 kg.

1" *4SP*

PM22-9J

140 T | +25 mm | 110 mm | 22 kg.

1"1/4 *4SP*

PM22P-9J

140 T | +20 mm | 110 mm | 55 kg.

1"1/4 *4SP*

ELÉCTRICAS · ELECTRICAL

PE 28 9J NT

170 T | +26 mm | 110 mm

1"1/4 *4SP*

PE 38 15J NT

220 T | +32 mm | 130 mm

2" *4 SP*
1"6SP

PE 50 17J NT

420 T | +32 mm | 130 mm

2" *6 SP*

Bajo pedido
Under Request

SE 28 5J N/10J N

137 T | +28 mm | 100 mm

1"1/4 *4SP*

PE 38 12 J N

240 T | +38 mm | 118 mm

2" *4 SP*
1"6SP

PE 58 14J N | PE 58 14J 5.5 N

350 T | +54 mm | 180 mm

2" *6 SP*
3"2 SP

CUTTING MACHINES

Cortadoras
Schneidemaschinen und Zubehör
Trongommeuse et Accessoires

MANGUERA HIDRÁULICA · HYDRAULIC HOSES

ELÉCTRICAS · ELECTRICAL

CHMT-20 N

Ø Max. 50mm
2,2 Kw
Ø 250 mm

1"1/4 *4SP*

CHM4-32 N

Ø Max. 75mm
3 Kw
Ø 250 mm

2" *4SP*

CHM4-32 N2

Ø Max. 75mm
4 Kw
Ø 300 mm

2" *4SH*

CHM6-32 N

Ø Max. 125mm
5,5 Kw
Ø 520 mm

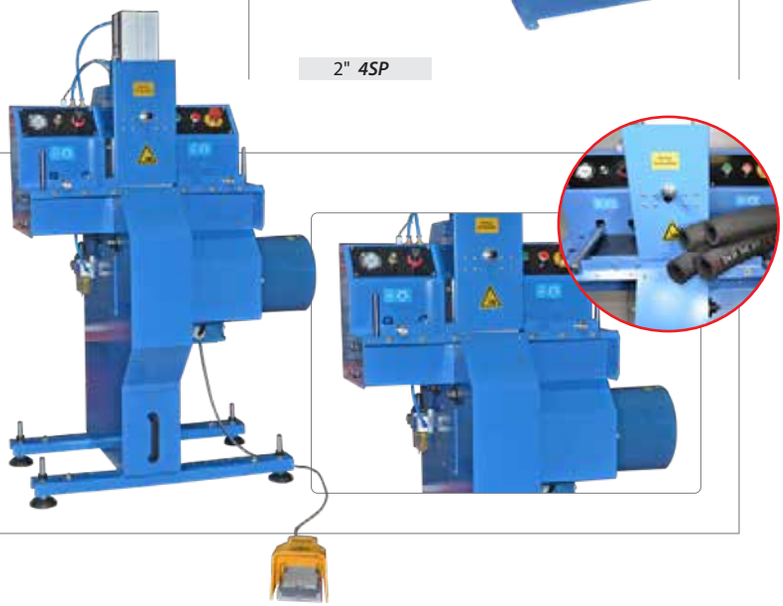

2" *6SP*
2" *IND*

Disponibles múltiples perfiles de discos
Available several profiles blades

PORTARROLLOS, EXPOSITORES Y ENROLLADORES · REEL HOSE, ROLL HOLDERS AND EXHIBITORS

ROLLER

S.S 316

PRO7

Carga máx. recomendada / bandeja: 70 Kg.

Carga total recomendada: 490 Kg.

Each holder max 70 kg

Total max. capacity: 490 kg

PCM3

Carga máx. rollo: 35 Kg.

Each roll max 35 Kg.

ACCESORIOS PARA PRENSAS · ACCESSORIES FOR CRIMPING MACHINES

M PE 38 NT

SPEBD N

EGN | EGNT

PEDAL.N/NT

GARRAS ESPECIALES
SPECIAL DIES

SKIVING MACHINES

Peladoras
Schälmaschinen
Dénudeuse

MANGUERA HIDRÁULICA · HYDRAULIC HOSES

PELADORA · SKIVING MACHINE

PB-32N

2″ R.P.M 300 0.75 Kw

2″

Útiles / Tools

Portaherramientas.
Tool holder

PMT 2

2″

Peladora Manual
Manual hose skiving

BANCO DE PRUEBAS · TEST BENCH

TB 2500

DESCUBRE NUESTRO CATÁLOGO DE MÁQUINAS

DISCOVER OUR MACHINE CATALOGUE

MACHINES FOR PROCESSING RIGID PIPES

Máquinas para tubo rígido
Maschinen für tube
Macchines pour tube

PIPE · TUBO RÍGIDO

DEBURRING MACHINE · DESBARBADORA

DEBUR01

R.P.M 75 | 0.18 Kw | Ø 6- 42 mm | 30 kg

Útiles de desbarbado incluidos

Deburring tools included

ASSEMBLY MACHINE · MONTAJE

USFL/01 MAN

6 → 42 x 4 mm

DIN 2353 | JIC 37°

TUBE2437

6 → 42 x 4 mm | 0,75 Kw

DIN 2353 | JIC 37°

BENDING MACHINES · DOBLADORAS

M18 6-18

6 → 18 mm

CMS42

6 → 42 x 4 mm

Con soporte
With tool-holder cabinet.

BENDER642

6 → 42 x 4 mm

1.1 Kw

Dobladora eléctrica con mueble.
Electric bending machine with cabinet

Bending & Assembly Machine Tools · Útiles para las máquinas de doblado y montaje de racores

CUC42

Matrices de doblado
Bending tools

TOOLHOLDER37

Matrices JIC 37°
Tools JIC 37°

BL

JIC 37°

Bloque BL JIC 37°
BL Block JIC 37°

TOOLHOLDER24

DIN 2353

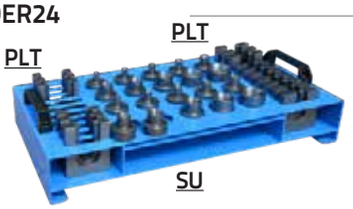

Machos y matrices DIN 2353
Sockets & plates DIN 2353

WORK BENCH · BANCOS DE TRABAJO

CEN-MINI

1.7 Kw max.

210 kg.

Pequeño y económico

Small & inexpensive

Mini
Mini

CEN-JU

4.6 Kw max.

300 kg.

Max. Ø 100 mm.

220 l/min.
AIR

Completo
Complete

Con corte & aire comprimido

With cutting & compressed air

Tubo métrico 104
Metric pipe
Tube rigide métrique
Tubo rigido metrico

Racores DIN 2353 105
DIN 2353 Pipe fittings
Raccords à bague DIN 2353
Raccordi DIN 2353

Racores JIC 37° 125
Flare fittings JIC 37°
Adapteurs JIC 37°
Raccordi JIC 37°

02

TUBO RÍGIDO

Pipe fittings

Raccord tube rigide

Raccordi DIN2353 – JIC 37°

TYPE APPROVED PRODUCT
DNV
DNV.COM/AF

RACORES FABRICADOS POR
PIPE FITTINGS MANUFACTURED BY DICSA

CERTIFIED
ISO 9001
BUREAU VERITAS

SUSTAINABLE DEVELOPMENT GOALS

CERTIFIED
ISO 14001
BUREAU VERITAS

INSTRUCCIONES DE MONTAJE DE RACOR DIN 2353 SOBRE EL TUBO RÍGIDO (SE RECOMIENDA EL USO DE HERRAMIENTAS DE PREMONTAJE)
ASSEMBLY OF THE PIPE FITTINGS DIN 2353 IN THE RIGID PIPE (IT IS RECOMMENDED TO USE PRE-ASSEMBLY TOOLS)

1 CORTE Y PREPARACIÓN DEL TUBO
PIPE SAW & PREPARATION

-Fija el tubo a dispositivos rígidos
-Corta el tubo recto y sin rebabas (max. ± 1° de desviación)
-No utilice cortatubos

- Clamp onto rigid fixtures
- Cut tube squarely and deburr thoroughly (max. ± 1° deviation)
-Do not use pipe cutters

ALTURA MÍNIMA(H RECTA): DOS VECES LA LONGITUD DE LA TUERCA

LONGITUD MÍNIMA(L): 2,5 - 3 VECES LA LONGITUD DE LA TUERCA

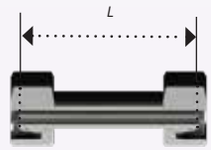

Series	LL				L										S									
Ø ext. Pipe	4	5	6	8	6	8	10	12	15	18	22	28	35	42	6	8	10	12	14	16	20	25	30	38
H min.	LL				L										S									
	24	25	25	26	31	31	33	33	36	38	42	42	48	48	35	35	37	37	43	43	50	54	58	65
L min.	LL				L										S									
	30	32	32	33	39	39	42	42	45	48	53	53	60	60	44	44	47	47	54	54	63	68	73	82

- Cortar el tubo a escuadra y eliminar rebabas.

- Rectangulary saw off the pipe and remove all burrs.

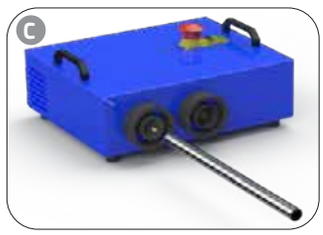

-Quita las rebabas interiores y exteriores
-Las rebabas grandes pueden dañar las juntas

- Remove internal and external burrs
- Seal can be damaged by large burrs

2 MONTAJE EN BANCO
ASSEMBLY IN VICE

-Utiliza lubricantes específicos (GR ASW120)
-Lubricar las roscas de los racores inox adecuadamente.

- Use properly lubricants (GR ASW120)
- Threads of stainless steel fittings must be lubricated.

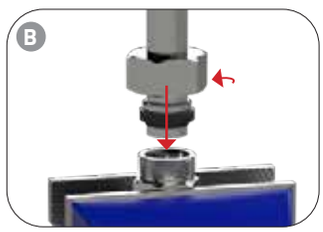

-Siga instrucciones de la imagen
-Utilizar el cuerpo del racor una única vez (use herramientas de montaje z vomo)
-Realiza el roscado de forma manual

-Follow picture instructions
- Fitting body may be used one time only (use preassembly tools Z VOMO)
- Screw on nut until finger-tight

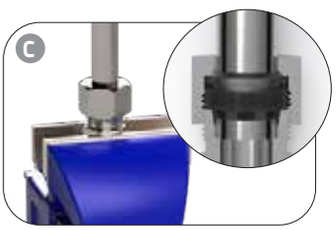

- Presione firmemente el final del tubo en el cono de montaje.

- Press tube-end firmly into the assembly cone.

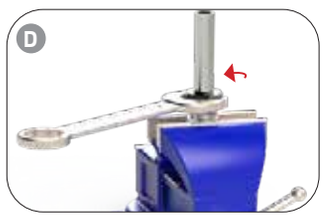

-Apriete hasta notar un fuerte incremento de resistencia (aprox. 1 ó 1,5 vueltas)

-Tighten until sharp increase of resistance (approx. 1 to 1 1/2 turns)

3 COMPROBACIÓN DEL MONTAJE - CONTROL
ASSEMBLY CHECK - CONTROL

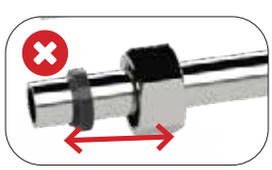

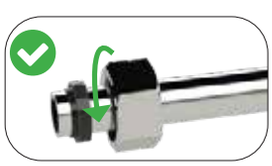

CONTROL ZACJ2/ACJ2: COMPROBAR EL ESPACIO ENTRE EL ANILLO DE ESTANQUEIDAD Y EL DE RETENCIÓN

ZACJ2/ACJ2 CONTROL: GAP BETWEEN SEALING RING AND RETAINING RING MUST BE CHECKED

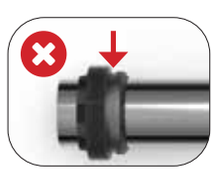

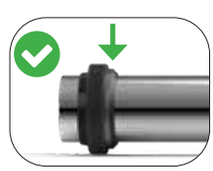

4 MONTAJE FINAL: INSTALACIÓN DEL SISTEMA DE TUBO
FINAL ASSEMBLY: INSTALLATION OF THE TUBE SYSTEM

- Repetir paso 2.A
- Repeat step 2. A

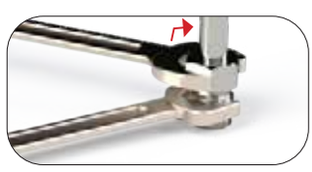

Monta el racor hasta que quede apretado usando la llave. Apriete fuertemente el racor 1 ó 1,5 vueltas, en giros de 60°-90°.

Assemble fitting until wrench-tight. Then tighten fitting firmly by min. 1/6 (max. 1/4) turns (1 1/2 flats)

Tubo métrico

Metric pipe
Tube rigide métrique
Tubo rigido metrico

Métrico · Metric · Métrique · Metrico | 104

ZTH0

ZTH0...-3

Racores DIN 2353

DIN 2353 Pipe fittings
Raccords à bague DIN 2353
Raccordi DIN 2353

Tuercas y anillos • Nuts and cutting rings • Écrous et bagues • Dadi e anelli | 105

ZML/ZMS ZACL/ZACS ZVHS ZACJ ZACJ2 ZMJL / ZMJS

Uniones tubo-tubo • Straight couplings • Raccords union double • Raccordi intermedi | 107

ZDL/ZDS ZEL/ZES ZDL/ZDS ZTL/ZTS ZKVL/ZKVS

Uniones rectas tubo-rosca • Straight male stud couplings • Raccords union simple mâle • Raccordi di estremitá diritti | 109

ZAL/ZAS RC ZAL/ZAS BSP WD ZAL/ZAS BSP ZAL/ZAS M WD ZAL/ZAS UNF ZAKL/ZAKS NPT ZAKL/ZAKS BSPT ZAKL/ZAKS METRIC

Codos tubo-rosca • Male stud elbows • Raccords coude mâle gaz • Raccordi di estremitá a 90° | 112

ZCKL/ZCKS BSPT Z WEE ZCKL/ZCKS NPT ZCKL/ZCKS METRIC

TES rosca lateral • Male stud barrel • Raccords Té mâle latéral • Raccordi di estremitá a L | 113

ZLKL/ZLKS BSPT ZLKL/ZLKS METRIC

TES rosca central • Male stud branch • Raccords Té mâle central • Raccordi di estremitá a T | 113

ZFKL/ZFKS BSPT ZFKL/ZFKS METRIC

Uniones Métricas • Metric unions • Raccords union Métrique • Raccordi Metrici | 114

ZKORL TLM ZKORS TLM

Reducciones roscadas • Reductions • Raccords de réduction • Raccordi di riduzione filettati | 115

ZRI-R WD

Racores regulables • Adjustable stud couplings • Raccords régulables • Raccordi orientabili | 116

ZEEL/ZEES CTA ZEEL/ZEES TLM ZTEL/ZTES TLM ZLEL/ZLES TLM

Racores DIN 2353

DIN 2353 Pipe fittings
Raccords à bague DIN 2353
Raccordi DIN 2353

Tubo roscado (hembra giratoria) • Adjustable straight stud • Raccords tube fileté • Raccordi di estremitá per combinazioni | 117

ZATL/ZATS

ZRAL/ZRAS BSP TLM WD

ZRAL/ZRAS NPT TLM

ZRAL/ZRAS METRIC TLM WD

Soldables • Welding fittings • Raccords à souder • Raccordi a saldare | 118

ZASL/ZASS

ZESVL/ZESVS

ZORIL/ZORIS

Pasatabiques • Bulkhead • Raccords passe cloison • Raccordi passaparete | 119

ZSVL/ZSVS

ZUSVL/ZUSVS

KZTPM

Racor recto hembra • Straight female coupling • Raccords droits femelle • Raccordi diritti con estremitá femmina | 120

ZGAIL/ZGAIS BSP

ZMAVL/ZMAVS

ZAM

ZGAIL/ZGAIS METRIC

Z MAFL/ZMFAS

Orientables • Banjos • Raccords orientables • Raccordi orientabili ad occhio | 121

ZWSVL/ZWSVS BSP

ZWSVL/ZWSVS METRIC

Tapones • Plugs • Raccords bouchon métrique • Tappi | 122

ZBUTZEN L/S

ZSTOPFEN BSP

ZSTOPFEN METRIC

Juntas • O-rings & captive seals • Joints • Guarnizioni | 122

JVT

JVBSP/JVM

Accesorios para montaje • Accessories for the assembly • Accessoires pour le montage • Accessori per assemblaggio | 123

ZVOMO

Grasa

Válvulas antirretorno • Valves • Valves clapet antiretour • Valvole di ritegno | 124

ZRHVL/ZRHVS

ZRHZL/ZRHZS

ZRHDL/ZRHDS

Racores JIC 37°

Flare fittings JIC 37°
Adapteurs JIC 37°
Raccordi JIC 37°

Tuercas, ferulas y tapones JIC 37° • JIC 37° Nuts, sleeves and plugs • Écrous, ferrules et bouchons JIC 37° • Dadi, bussole e tappi JIC 37° | 125

ZS110 ZS120 ZS121 ZS140 ZS130

Uniones rectas JIC 37° • JIC 37° Straight unions • Union droite JIC 37° • Adattatori diritti JIC 37° | 126

ZS260 ZS260 ZS250 ZS260_OR ZS240 ZS200 ZS380 ZS230 ZS180 ZS210

ZS295 ZS740 ZS291 ZS290 ZS185 JVMET JVUNF ZS730 JVMBSP JTVJIC

Codos 90° JIC 37° • JIC 37° 90° Elbows • Coudes 90° JIC 37° • Adattatori a 90° JIC 37° | 131

ZS500 ZS675 ZS700 ZS500_OR ZS650 ZS570 ZS575 ZS550 ZS595 ZS525

Codos 45 JIC 37° • JIC 37° 45° Elbows • Coudes 45° JIC 37° • Adattatori a 45° JIC 37° | 133

ZS690 ZS775 ZS725

Tes JIC 37° • JIC 37° Tees • Tés JIC 37° • Adattatori a T JIC 37° | 134

ZS505 ZS680 ZS630 ZS505_OR ZS685 ZS625

Tubo métrico

Metric pipe
Tube rigide métrique
Tubo rigido metrico

Tubo rígido - 6 mts

Rigid pipe - 6 mts

Tube rigide - 6 mts

Tubo rigido Inox - 6 metri

Ø EXT. Ø OUTER	Ø INT. Ø INNER		Referencia Part n°	€/M
6	4		ZTH0060100	-
6	3		ZTH0060150	-
8	6		ZTH0080100	-
8	5		ZTH0080150	-
10	8		ZTH0100100	-
10	7		ZTH0100150	-
10	6		ZTH0100200	-
12	10		ZTH0120100	-
12	9		ZTH0120150	-
12	8		ZTH0120200	-
12	7		ZTH0120250	-
14	10		ZTH0140200	-
15	12		ZTH0150150	-
16	12		ZTH0160200	-
16	10		ZTH0160300	-
18	15		ZTH0180150	-
18	14		ZTH0180200	-
20	14		ZTH0200300	-
22	18		ZTH0220200	-
25	20	NEW	ZTH0250250	-
25	19		ZTH0250300	-
28	24		ZTH0280200	-
30	24		ZTH0300300	-
35	31		ZTH0350200	-
38	30		ZTH0380400	-
42	38		ZTH0420200	-
42	36		ZTH0420300	-

Precio por metro. / *Price per meter.* / Les prix sont par mètre. / *I prezzi si intendono al metro*

Tubo rígido - 3 mts

Rigid pipe - 3 mts

Tube rigide - 3 mts

Tubo rigido Inox - 3 metri

Ø EXT. Ø OUTER	Ø INT. Ø INNER		Referencia Part n°	€/M
6	4		ZTH0060100-3	-
6	3		ZTH0060150-3	-
8	6		ZTH0080100-3	-
8	5		ZTH0080150-3	-
10	8		ZTH0100100-3	-
10	7		ZTH0100150-3	-
12	10		ZTH0120100-3	-
10	6		ZTH0100200-3	-
12	9		ZTH0120150-3	-
12	8		ZTH0120200-3	-
12	7		ZTH0120250-3	-
14	10		ZTH0140200-3	-
15	12		ZTH0150150-3	-
16	12		ZTH0160200-3	-
16	10		ZTH0160300-3	-
18	15		ZTH0180150-3	-
18	14		ZTH0180200-3	-
20	14		ZTH0200300-3	-
22	18		ZTH0220200-3	-
25	20	NEW	ZTH0250250-3	-
25	19		ZTH0250300-3	-
28	24		ZTH0280200-3	-
30	24		ZTH0300300-3	-
35	31		ZTH0350200-3	-
38	30		ZTH0380400-3	-
42	38		ZTH0420200-3	-
42	36		ZTH0420300-3	-

Precio por metro. / *Price per meter.* / Les prix sont par mètre. / *I prezzi si intendono al metro*

TUBO SCHEDULE **PIPE**

PÁGINA | PAGE
143

Consulta en nuestra ficha técnica datos | Check our technical sheet for data

Racores DIN 2353

DIN 2353 Pipe fittings
Raccords à bague DIN 2353
Raccordi DIN 2353

Tuercas Métricas DIN 3870

Nuts DIN 3870

Écrou DIN 3870

Dado DIN 3870

TUBO PIPE	SERIE SERIES	ROSCA THREAD	Referencia Part n°	€
4	LL	M8X1	**Z MLL 4**	-
6	LL	M10X1	**Z MLL 6**	-
8	LL	M12X1	**Z MLL 8**	-
6	L	M12X1.5	**Z ML 6**	-
8	L	M14X1.5	**Z ML 8**	-
10	L	M16X1.5	**Z ML 10**	-
12	L	M18X1.5	**Z ML 12**	-
15	L	M22X1.5	**Z ML 15**	-
18	L	M26X1.5	**Z ML 18**	-
22	L	M30X2	**Z ML 22**	-
28	L	M36X2	**Z ML 28**	-
35	L	M45X2	**Z ML 35**	-
42	L	M52X2	**Z ML 42**	-
6	S	M14X1.5	**Z MS 6**	-
8	S	M16X1.5	**Z MS 8**	-
10	S	M18X1.5	**Z MS 10**	-
12	S	M20X1.5	**Z MS 12**	-
14	S	M22X1.5	**Z MS 14**	-
16	S	M24X1.5	**Z MS 16**	-
20	S	M30X2	**Z MS 20**	-
25	S	M36X2	**Z MS 25**	-
30	S	M42X2	**Z MS 30**	-
38	S	M52X2	**Z MS 38**	-

Anillos de refuerzo

Reinforced ring

Bague de renforcement

Anello di rinforzo

TUBO PIPE	Referencia Part n°	€
4	**Z VHS 4**	-
5	**Z VHS 5**	-
6	**Z VHS 6**	-
7	**Z VHS 7**	-
8	**Z VHS 8**	-
9	**Z VHS 9**	-
10	**Z VHS 10**	-
11	**Z VHS 11**	-
12	**Z VHS 12**	-
13	**Z VHS 13**	-
14	**Z VHS 14**	-
15	**Z VHS 15**	-
16	**Z VHS 16**	-
17	**Z VHS 17**	-
18	**Z VHS 18**	-
19	**Z VHS 19**	-
20	**Z VHS 20**	-
22	**Z VHS 22**	-
24	**Z VHS 24**	-
25	**Z VHS 25**	-
31	**Z VHS 31**	-
33	**Z VHS 33**	-
38	**Z VHS 38**	-

Anillos de corte DIN 3861

Cutting rings DIN 3861

Bague DIN 3861

Anello DIN 3861

TUBO PIPE	SERIE SERIES	Referencia Part n°	€
4	LL	**Z ACLL 4**	-
6	LL	**Z ACLL 6**	-
8	LL	**Z ACLL 8**	-
6	L/S	**Z ACL 6**	-
8	L/S	**Z ACL 8**	-
10	L/S	**Z ACL 10**	-
12	L/S	**Z ACL 12**	-
15	L	**Z ACL 15**	-
18	L	**Z ACL 18**	-
22	L	**Z ACL 22**	-
28	L	**Z ACL 28**	-
35	L	**Z ACL 35**	-
42	L	**Z ACL 42**	-
14	S	**Z ACS 14**	-
16	S	**Z ACS 16**	-
20	S	**Z ACS 20**	-
25	S	**Z ACS 25**	-
30	S	**Z ACS 30**	-
38	S	**Z ACS 38**	-

Anillos de corte con junta

Cutting ring with joint

Bague avec joint

Anello tagliente con guarnizione

TUBO PIPE	SERIE SERIES	Referencia Part n°	€
6	L	**Z ACJL 6**	-
8	L	**Z ACJL 8**	-
10	L	**Z ACJL 10**	-
12	L	**Z ACJL 12**	-
15	L	**Z ACJL 15**	-
18	L	**Z ACJL 18**	-
22	L	**Z ACJL 22**	-
28	L	**Z ACJL 28**	-
35	L	**Z ACJL 35**	-
42	L	**Z ACJL 42**	-
6	S	**Z ACJS 6**	-
8	S	**Z ACJS 8**	-
10	S	**Z ACJS 10**	-
12	S	**Z ACJS 12**	-
14	S	**Z ACJS 14**	-
16	S	**Z ACJS 16**	-
20	S	**Z ACJS 20**	-
25	S	**Z ACJS 25**	-
30	S	**Z ACJS 30**	-
38	S	**Z ACJS 38**	-

***Consultar** / On request**/ Sur demande** / Su richiesta

Racores DIN 2353

DIN 2353 Pipe fittings
Raccords à bague DIN 2353
Raccordi DIN 2353

Anillos de corte con junta ZACJ2

NEW

S.S.Cutting ring with joint ZACJ2

Bague Acier inox avec joint ZACJ2

Anello tagliente con guarnizione ZACJ2

TUBO PIPE	SERIE SERIES	Referencia Part n°	€
6	L	**Z ACJ2L 6**	-
8	L	**Z ACJ2L 8**	-
10	L	**Z ACJ2L 10**	-
12	L	**Z ACJ2L 12**	-
15	L	**Z ACJ2L 15**	-
18	L	**Z ACJ2L 18**	-
22	L	**Z ACJ2L 22**	-
28	L	**Z ACJ2L 28**	-
35	L	**Z ACJ2L 35**	-
42	L	**Z ACJ2L 42**	-
6	S	**Z ACJ2S 6**	-
8	S	**Z ACJ2S 8**	-
10	S	**Z ACJ2S 10**	-
12	S	**Z ACJ2S 12**	-
14	S	**Z ACJ2S 14**	-
16	S	**Z ACJ2S 16**	-
20	S	**Z ACJ2S 20**	-
25	S	**Z ACJ2S 25**	-
30	S	**Z ACJ2S 30**	-
38	S	**Z ACJ2S 38**	-

Tuerca equipada ZACJ2

NEW

ZACJ2 Equipped Nut

Écrou équipé ZACJ2

Dado DIN + guarnizione ZACJ2

TUBO PIPE	SERIE SERIES	ROSCA THREAD	Referencia Part n°	€
6	L	M12X1.5	**Z MJ2L 6**	-
8	L	M14X1.5	**Z MJ2L 8**	-
10	L	M16X1.5	**Z MJ2L 10**	-
12	L	M18X1.5	**Z MJ2L 12**	-
15	L	M22X1.5	**Z MJ2L 15**	-
18	L	M26X1.5	**Z MJ2L 18**	-
22	L	M30X2	**Z MJ2L 22**	-
28	L	M36X2	**Z MJ2L 28**	-
35	L	M45X2	**Z MJ2L 35**	-
42	L	M52X2	**Z MJ2L 42**	-
6	S	M14X1.5	**Z MJ2S 6**	-
8	S	M16X1.5	**Z MJ2S 8**	-
10	S	M18X1.5	**Z MJ2S 10**	-
12	S	M20X1.5	**Z MJ2S 12**	-
14	S	M22X1.5	**Z MJ2S 14**	-
16	S	M24X1.5	**Z MJ2S 16**	-
20	S	M30X2	**Z MJ2S 20**	-
25	S	M36X2	**Z MJ2S 25**	-
30	S	M42X2	**Z MJ2S 30**	-
38	S	M52X2	**Z MJ2S 38**	-

PREVENTS LEAKS IN EQUIPMENT SUBJECT TO HIGH VIBRATIONS

EVITA FUGAS EN EQUIPAMIENTOS SOMETIDOS A ALTAS VIBRACIONES

ZACJ2

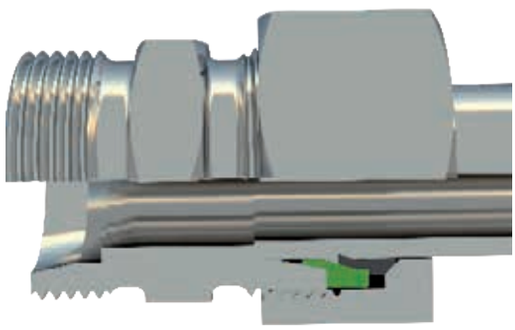

- **‡ Pressure rating up to 800 bar (PN)**
- **‡ Reduction of tightening torques up to 25%**
- **‡ Easier assembly**
- **‡ Simple handling through functional nut**

- ‡ Hasta una presión nominal (PN) de 800 bar
- ‡ Reducción de los pares de apriete en hasta 25%
- ‡ Un montaje aún más sencillo
- ‡ Sencillo manejo mediante tuerca funcional

Racores DIN 2353

DIN 2353 Pipe fittings
Raccords à bague DIN 2353
Raccordi DIN 2353

Racor unión recta tubo - tubo

Straight coupling

Raccord union double

Raccordo intermedio diritto

TUBO PIPE	SERIE SERIES	Referencia Part n°	€	Referencia STA Part N° STA	€
4	LL	**Z DLL 4**	-	---	-
6	LL	**Z DLL 6**	-	---	-
8	LL	**Z DLL 8**	-	---	-
6	L	**Z DL 6**	-	**Z STA DL 6**	-
8	L	**Z DL 8**	-	**Z STA DL 8**	-
10	L	**Z DL 10**	-	**Z STA DL 10**	-
12	L	**Z DL 12**	-	**Z STA DL 12**	-
15	L	**Z DL 15**	-	**Z STA DL 15**	-
18	L	**Z DL 18**	-	**Z STA DL 18**	-
22	L	**Z DL 22**	-	**Z STA DL 22**	-
28	L	**Z DL 28**	-	**Z STA DL 28**	-
35	L	**Z DL 35**	-	**Z STA DL 35**	-
42	L	**Z DL 42**	-	**Z STA DL 42**	-
6	S	**Z DS 6**	-	**Z STA DS 6**	-
8	S	**Z DS 8**	-	**Z STA DS 8**	-
10	S	**Z DS 10**	-	**Z STA DS 10**	-
12	S	**Z DS 12**	-	**Z STA DS 12**	-
14	S	**Z DS 14**	-	**Z STA DS 14**	-
16	S	**Z DS 16**	-	**Z STA DS 16**	-
20	S	**Z DS 20**	-	**Z STA DS 20**	-
25	S	**Z DS 25**	-	**Z STA DS 25**	-
30	S	**Z DS 30**	-	**Z STA DS 30**	-
38	S	**Z DS 38**	-	**Z STA DS 38**	-

Racor unión en codo tubo - tubo

Equal elbow coupling

Raccord coude égal

Raccordo intermedio a 90°

TUBO PIPE	SERIE SERIES	Referencia Part n°	€	Referencia STA Part N° STA	€
4	LL	**Z ELL 4**	-	---	-
6	LL	**Z ELL 6**	-	---	-
8	LL	**Z ELL 8**	-	---	-
6	L	**Z EL 6**	-	**Z STA EL 6**	-
8	L	**Z EL 8**	-	**Z STA EL 8**	-
10	L	**Z EL 10**	-	**Z STA EL 10**	-
12	L	**Z EL 12**	-	**Z STA EL 12**	-
15	L	**Z EL 15**	-	**Z STA EL 15**	-
18	L	**Z EL 18**	-	**Z STA EL 18**	-
22	L	**Z EL 22**	-	**Z STA EL 22**	-
28	L	**Z EL 28**	-	**Z STA EL 28**	-
35	L	**Z EL 35**	-	**Z STA EL 35**	-
42	L	**Z EL 42**	-	**Z STA EL 42**	-
6	S	**Z ES 6**	-	**Z STA ES 6**	-
8	S	**Z ES 8**	-	**Z STA ES 8**	-
10	S	**Z ES 10**	-	**Z STA ES 10**	-
12	S	**Z ES 12**	-	**Z STA ES 12**	-
14	S	**Z ES 14**	-	**Z STA ES 14**	-
16	S	**Z ES 16**	-	**Z STA ES 16**	-
20	S	**Z ES 20**	-	**Z STA ES 20**	-
25	S	**Z ES 25**	-	**Z STA ES 25**	-
30	S	**Z ES 30**	-	**Z STA ES 30**	-
38	S	**Z ES 38**	-	**Z STA ES 38**	-

Racor unión recta en reducción tubo - tubo

Straight reducing coupling

Raccord union double en réduction

Raccordo intermedio di riduzione

TUBO PIPE	TUBO PIPE	SERIE SERIES	Referencia Part n°	€	Referencia STA Part N° STA	€
8	6	L	**Z DL 8-6**	-	**Z STA DL 8-6**	-
10	6	L	**Z DL 10-6**	-	**Z STA DL 10-6**	-
10	8	L	**Z DL 10-8**	-	**Z STA DL 10-8**	-
12	6	L	**Z DL 12-6**	-	**Z STA DL 12-6**	-
12	8	L	**Z DL 12-8**	-	**Z STA DL 12-8**	-
12	10	L	**Z DL 12-10**	-	**Z STA DL 12-10**	-
15	6	L	**Z DL 15-6**	-	**Z STA DL 15-6**	-
15	8	L	**Z DL 15-8**	-	**Z STA DL 15-8**	-
15	10	L	**Z DL 15-10**	-	**Z STA DL 15-10**	-
15	12	L	**Z DL 15-12**	-	**Z STA DL 15-12**	-
18	8	L	**Z DL 18-8**	-	**Z STA DL 18-8**	-
18	10	L	**Z DL 18-10**	-	**Z STA DL 18-10**	-
18	12	L	**Z DL 18-12**	-	**Z STA DL 18-12**	-
18	15	L	**Z DL 18-15**	-	**Z STA DL 18-15**	-
22	12	L	**Z DL 22-12**	-	**Z STA DL 22-12**	-
22	15	L	**Z DL 22-15**	-	**Z STA DL 22-15**	-
22	18	L	**Z DL 22-18**	-	**Z STA DL 22-18**	-
28	22	L	**Z DL 28-22**	-	**Z STA DL 28-22**	-
35	28	L	**Z DL 35-28**	-	**Z STA DL 35-28**	-
42	28	L	**Z DL 42-28**	-	**Z STA DL 42-28**	-
42	35	L	**Z DL 42-35**	-	**Z STA DL 42-35**	-
8	6	S	**Z DS 8-6**	-	**Z STA DS 8-6**	-
10	6	S	**Z DS 10-6**	-	**Z STA DS 10-6**	-
10	8	S	**Z DS 10-8**	-	**Z STA DS 10-8**	-
12	6	S	**Z DS 12-6**	-	**Z STA DS 12-6**	-
12	8	S	**Z DS 12-8**	-	**Z STA DS 12-8**	-
12	10	S	**Z DS 12-10**	-	**Z STA DS 12-10**	-
14	10	S	**Z DS 14-10**	-	**Z STA DS 14-10**	-
16	10	S	**Z DS 16-10**	-	**Z STA DS 16-10**	-
16	12	S	**Z DS 16-12**	-	**Z STA DS 16-12**	-
16	14	S	**Z DS 16-14**	-	**Z STA DS 16-14**	-
20	10	S	**Z DS 20-10**	-	**Z STA DS 20-10**	-
20	12	S	**Z DS 20-12**	-	**Z STA DS 20-12**	-
20	14	S	**Z DS 20-14**	-	**Z STA DS 20-14**	-
20	16	S	**Z DS 20-16**	-	**Z STA DS 20-16**	-
25	16	S	**Z DS 25-16**	-	**Z STA DS 25-16**	-
25	20	S	**Z DS 25-20**	-	**Z STA DS 25-20**	-
30	20	S	**Z DS 30-20**	-	**Z STA DS 30-20**	-
30	25	S	**Z DS 30-25**	-	**Z STA DS 30-25**	-
38	25	S	**Z DS 38-25**	-	**Z STA DS 38-25**	-
38	30	S	**Z DS 38-30**	-	**Z STA DS 38-30**	-

Racores DIN 2353

DIN 2353 Pipe fittings
Raccords à bague DIN 2353
Raccordi DIN 2353

Racor unión en T tubo - tubo

Equal Tee

Raccord Té égal

Raccordo intermedio a T

TUBO PIPE	SERIE SERIES	Referencia Part n°	€	Referencia STA Part N° STA	€
4	LL	**Z TLL 4**	-	---	-
6	LL	**Z TLL 6**	-	---	-
8	LL	**Z TLL 8**	-	---	-
6	L	**Z TL 6**	-	**Z STA TL 6**	-
8	L	**Z TL 8**	-	**Z STA TL 8**	-
10	L	**Z TL 10**	-	**Z STA TL 10**	-
12	L	**Z TL 12**	-	**Z STA TL 12**	-
15	L	**Z TL 15**	-	**Z STA TL 15**	-
18	L	**Z TL 18**	-	**Z STA TL 18**	-
22	L	**Z TL 22**	-	**Z STA TL 22**	-
28	L	**Z TL 28**	-	**Z STA TL 28**	-
35	L	**Z TL 35**	-	**Z STA TL 35**	-
42	L	**Z TL 42**	-	**Z STA TL 42**	-
6	S	**Z TS 6**	-	**Z STA TS 6**	-
8	S	**Z TS 8**	-	**Z STA TS 8**	-
10	S	**Z TS 10**	-	**Z STA TS 10**	-
12	S	**Z TS 12**	-	**Z STA TS 12**	-
14	S	**Z TS 14**	-	**Z STA TS 14**	-
16	S	**Z TS 16**	-	**Z STA TS 16**	-
20	S	**Z TS 20**	-	**Z STA TS 20**	-
25	S	**Z TS 25**	-	**Z STA TS 25**	-
30	S	**Z TS 30**	-	**Z STA TS 30**	-
38	S	**Z TS 38**	-	**Z STA TS 38**	-

Racor unión en cruz tubo - tubo

Equal cross

Raccord croix égale

Raccordo intermedio a croce

TUBO PIPE	SERIE SERIES	Referencia Part n°	€	Referencia STA Part N° STA	€
6	L	**Z KVL 6**	-	**Z STA KVL 6**	-
8	L	**Z KVL 8**	-	**Z STA KVL 8**	-
10	L	**Z KVL 10**	-	**Z STA KVL 10**	-
12	L	**Z KVL 12**	-	**Z STA KVL 12**	-
15	L	**Z KVL 15**	-	**Z STA KVL 15**	-
18	L	**Z KVL 18**	-	**Z STA KVL 18**	-
22	L	**Z KVL 22**	-	**Z STA KVL 22**	-
28	L	**Z KVL 28**	-	**Z STA KVL 28**	-
35	L	**Z KVL 35**	-	**Z STA KVL 35**	-
42	L	**Z KVL 42**	-	**Z STA KVL 42**	-
6	S	**Z KVS 6**	-	**Z STA KVS 6**	-
8	S	**Z KVS 8**	-	**Z STA KVS 8**	-
10	S	**Z KVS 10**	-	**Z STA KVS 10**	-
12	S	**Z KVS 12**	-	**Z STA KVS 12**	-
14	S	**Z KVS 14**	-	**Z STA KVS 14**	-
16	S	**Z KVS 16**	-	**Z STA KVS 16**	-
20	S	**Z KVS 20**	-	**Z STA KVS 20**	-
25	S	**Z KVS 25**	-	**Z STA KVS 25**	-
30	S	**Z KVS 30**	-	**Z STA KVS 30**	-
38	S	**Z KVS 38**	-	**Z STA KVS 38**	-

Racores DIN 2353

DIN 2353 Pipe fittings
Raccords à bague DIN 2353
Raccordi DIN 2353

Racor recto rosca cilíndrica BSP cono 60°

Straight male stud coupling BSP cyl. 60°

Raccord Union simple mâle gaz cylindrique 60°

Raccordo di estremitá diritto BSP sede 60°

TUBO PIPE	ROSCA THREAD	SERIE SERIES	Referencia Part n°	€	Referencia STA Part N° STA	€
6	1/8" BSP	L	Z AL 6 RC 1/8	-	Z STA AL 6 RC 1/8	-
6	1/4" BSP	L	Z AL 6 RC 1/4	-	Z STA AL 6 RC 1/4	-
6	3/8" BSP	L	Z AL 6 RC 3/8	-	Z STA AL 6 RC 3/8	-
6	1/2" BSP	L	Z AL 6 RC 1/2	-	Z STA AL 6 RC 1/2	-
8	1/8" BSP	L	Z AL 8 RC 1/8	-	Z STA AL 8 RC 1/8	-
8	1/4" BSP	L	Z AL 8 RC 1/4	-	Z STA AL 8 RC 1/4	-
8	3/8" BSP	L	Z AL 8 RC 3/8	-	Z STA AL 8 RC 3/8	-
8	1/2" BSP	L	Z AL 8 RC 1/2	-	Z STA AL 8 RC 1/2	-
10	1/8" BSP	L	Z AL 10 RC 1/8	-	Z STA AL 10 RC 1/8	-
10	1/4" BSP	L	Z AL 10 RC 1/4	-	Z STA AL 10 RC 1/4	-
10	3/8" BSP	L	Z AL 10 RC 3/8	-	Z STA AL 10 RC 3/8	-
10	1/2" BSP	L	Z AL 10 RC 1/2	-	Z STA AL 10 RC 1/2	-
12	1/4" BSP	L	Z AL 12 RC 1/4	-	Z STA AL 12 RC 1/4	-
12	3/8" BSP	L	Z AL 12 RC 3/8	-	Z STA AL 12 RC 3/8	-
12	1/2" BSP	L	Z AL 12 RC 1/2	-	Z STA AL 12 RC 1/2	-
15	3/8" BSP	L	Z AL 15 RC 3/8	-	Z STA AL 15 RC 3/8	-
15	1/2" BSP	L	Z AL 15 RC 1/2	-	Z STA AL 15 RC 1/2	-
15	3/4" BSP	L	Z AL 15 RC 3/4	-	Z STA AL 15 RC 3/4	-
18	1/2" BSP	L	Z AL 18 RC 1/2	-	Z STA AL 18 RC 1/2	-
18	3/4" BSP	L	Z AL 18 RC 3/4	-	Z STA AL 18 RC 3/4	-
18	3/8"BSP	L	Z AL 18 RC 3/8	-	Z STA AL 18 RC 3/8	-
22	3/8"BSP	L	Z AL 22 RC 3/8	-	Z STA AL 22 RC 3/8	-
22	1/2" BSP	L	Z AL 22 RC 1/2	-	Z STA AL 22 RC 1/2	-
22	3/4" BSP	L	Z AL 22 RC 3/4	-	Z STA AL 22 RC 3/4	-
22	1" BSP	L	Z AL 22 RC 1	-	Z STA AL 22 RC 1	-
28	3/4" BSP	L	Z AL 28 RC 3/4	-	Z STA AL 28 RC 3/4	-
28	1" BSP	L	Z AL 28 RC 1	-	Z STA AL 28 RC 1	-
35	1"1/4 BSP	L	Z AL 35 RC 1 1/4	-	Z STA AL 35 RC 1 1/4	-
35	1"1/2 BSP	L	Z AL 35 RC 1 1/2	-	Z STA AL 35 RC 1 1/2	-
42	1" 1/4 BSP	L	Z AL 42 RC 1 1/4	-	Z STA AL 42 RC 1 1/4	-
42	1"1/2 BSP	L	Z AL 42 RC 1 1/2	-	Z STA AL 42 RC 1 1/2	-
6	1/4" BSP	S	Z AS 6 RC 1/4	-	Z STA AS 6 RC 1/4	-
6	3/8" BSP	S	Z AS 6 RC 3/8	-	Z STA AS 6 RC 3/8	-
8	1/4" BSP	S	Z AS 8 RC 1/4	-	Z STA AS 8 RC 1/4	-
8	3/8" BSP	S	Z AS 8 RC 3/8	-	Z STA AS 8 RC 3/8	-
8	1/2" BSP	S	Z AS 8 RC 1/2	-	Z STA AS 8 RC 1/2	-
10	1/4" BSP	S	Z AS 10 RC 1/4	-	Z STA AS 10 RC 1/4	-
10	3/8" BSP	S	Z AS 10 RC 3/8	-	Z STA AS 10 RC 3/8	-
10	1/2" BSP	S	Z AS 10 RC 1/2	-	Z STA AS 10 RC 1/2	-
12	1/4" BSP	S	Z AS 12 RC 1/4	-	Z STA AS 12 RC 1/4	-
12	3/8" BSP	S	Z AS 12 RC 3/8	-	Z STA AS 12 RC 3/8	-
12	1/2" BSP	S	Z AS 12 RC 1/2	-	Z STA AS 12 RC 1/2	-
14	3/8" BSP	S	Z AS 14 RC 3/8	-	Z STA AS 14 RC 3/8	-
14	1/2" BSP	S	Z AS 14 RC 1/2	-	Z STA AS 14 RC 1/2	-
16	3/8" BSP	S	Z AS 16 RC 3/8	-	Z STA AS 16 RC 3/8	-
16	1/2" BSP	S	Z AS 16 RC 1/2	-	Z STA AS 16 RC 1/2	-
16	3/4" BSP	S	Z AS 16 RC 3/4	-	Z STA AS 16 RC 3/4	-
20	3/8" BSP	S	Z AS 20 RC 3/8	-	Z STA AS 20 RC 3/8	-
20	1/2" BSP	S	Z AS 20 RC 1/2	-	Z STA AS 20 RC 1/2	-
20	3/4" BSP	S	Z AS 20 RC 3/4	-	Z STA AS 20 RC 3/4	-
20	1" BSP	S	Z AS 20 RC 1	-	Z STA AS 20 RC 1	-
25	3/4" BSP	S	Z AS 25 RC 3/4	-	Z STA AS 25 RC 3/4	-
25	1" BSP	S	Z AS 25 RC 1	-	Z STA AS 25 RC 1	-
25	1" 1/4 BSP	S	Z AS 25 RC 1 1/4	-	Z STA AS 25 RC 1 1/4	-
30	1" BSP	S	Z AS 30 RC 1	-	Z STA AS 30 RC 1	-
30	1"1/4 BSP	S	Z AS 30 RC 1 1/4	-	Z STA AS 30 RC 1 1/4	-
30	1"1/2 BSP	S	Z AS 30 RC 1 1/2	-	Z STA AS 30 RC 1 1/2	-
38	1"1/4 BSP	S	Z AS 38 RC 1 1/4	-	Z STA AS 38 RC 1 1/4	-
38	1"1/2 BSP	S	Z AS 38 RC 1 1/2	-	Z STA AS 38 RC 1 1/2	-

Racor recto rosca cilíndrica BSP con junta

Straight male stud coupling BSP cylindrical with captive seal

Raccord union simple mâle gaz cylindrique avec joint plat

Raccordo di estremitá diritto BSP con guarnizione

TUBO PIPE	SERIE SERIES	ROSCA THREAD	Referencia Part n°	€	Referencia STA Part N° STA	€
6	L	1/8"BSP	Z AL 6 R 1/8WD	-	Z STA AL 6 R 1/8WD	-
6	L	1/4"BSP	Z AL 6 R 1/4WD	-	Z STA AL 6 R 1/4WD	-
6	L	3/8"BSP	Z AL 6 R 3/8WD	-	Z STA AL 6 R 3/8WD	-
8	L	1/8"BSP	Z AL 8 R 1/8WD	-	Z STA AL 8 R 1/8WD	-
8	L	1/4"BSP	Z AL 8 R 1/4WD	-	Z STA AL 8 R 1/4WD	-
8	L	3/8"BSP	Z AL 8 R 3/8WD	-	Z STA AL 8 R 3/8WD	-
8	L	1/2"BSP	Z AL 8 R 1/2WD	-	Z STA AL 8 R 1/2WD	-
10	L	1/8"BSP	Z AL 10 R 1/8WD	-	Z STA AL 10 R 1/8WD	-
10	L	1/4"BSP	Z AL 10 R 1/4WD	-	Z STA AL 10 R 1/4WD	-
10	L	3/8"BSP	Z AL 10 R 3/8WD	-	Z STA AL 10 R 3/8WD	-
10	L	1/2"BSP	Z AL 10 R 1/2WD	-	Z STA AL 10 R 1/2WD	-
12	L	1/4"BSP	Z AL 12 R 1/4WD	-	Z STA AL 12 R 1/4WD	-
12	L	3/8"BSP	Z AL 12 R 3/8WD	-	Z STA AL 12 R 3/8WD	-
12	L	1/2"BSP	Z AL 12 R 1/2WD	-	Z STA AL 12 R 1/2WD	-
15	L	3/8"BSP	Z AL 15 R 3/8WD	-	Z STA AL 15 R 3/8WD	-
15	L	1/2"BSP	Z AL 15 R 1/2WD	-	Z STA AL 15 R 1/2WD	-
15	L	3/4"BSP	Z AL 15 R 3/4WD	-	Z STA AL 15 R 3/4WD	-
18	L	3/8"BSP	Z AL 18 R 3/8WD	-	Z STA AL 18 R 3/8WD	-
18	L	1/2"BSP	Z AL 18 R 1/2WD	-	Z STA AL 18 R 1/2WD	-
18	L	3/4"BSP	Z AL 18 R 3/4WD	-	Z STA AL 18 R 3/4WD	-
22	L	1/2"BSP	Z AL 22 R 1/2WD	-	Z STA AL 22 R 1/2WD	-
22	L	3/4"BSP	Z AL 22 R 3/4WD	-	Z STA AL 22 R 3/4WD	-
22	L	1"BSP	Z AL 22 R 1WD	-	Z STA AL 22 R 1WD	-
28	L	3/4"BSP	Z AL 28 R 3/4WD	-	Z STA AL 28 R 3/4WD	-
28	L	1"BSP	Z AL 28 R 1WD	-	Z STA AL 28 R 1WD	-
35	L	1"BSP	Z AL 35 R 1WD	-	Z STA AL 35 R 1WD	-
35	L	1"1/4BSP	Z AL 35 R 1 1/4WD	-	Z STA AL 35 R 1 1/4WD	-
42	L	1"1/4BSP	Z AL 42 R 1 1/4WD	-	Z STA AL 42 R 1 1/4WD	-
42	L	1"1/2BSP	Z AL 42 R 1 1/2WD	-	Z STA AL 42 R 1 1/2WD	-
6	S	1/4"BSP	Z AS 6 R 1/4WD	-	Z STA AS 6 R 1/4WD	-
8	S	1/4"BSP	Z AS 8 R 1/4WD	-	Z STA AS 8 R 1/4WD	-
8	S	3/8"BSP	Z AS 8 R 3/8WD	-	Z STA AS 8 R 3/8WD	-
8	S	1/2"BSP	Z AS 8 R 1/2WD	-	Z STA AS 8 R 1/2WD	-
10	S	1/4"BSP	Z AS 10 R 1/4WD	-	Z STA AS 10 R 1/4WD	-
10	S	3/8"BSP	Z AS 10 R 3/8WD	-	Z STA AS 10 R 3/8WD	-
10	S	1/2"BSP	Z AS 10 R 1/2WD	-	Z STA AS 10 R 1/2WD	-
12	S	1/4"BSP	Z AS 12 R 1/4WD	-	Z STA AS 12 R 1/4WD	-
12	S	3/8"BSP	Z AS 12 R 3/8WD	-	Z STA AS 12 R 3/8WD	-
12	S	1/2"BSP	Z AS 12 R 1/2WD	-	Z STA AS 12 R 1/2WD	-
14	S	3/8"BSP	Z AS 14 R 3/8WD	-	Z STA AS 14 R 3/8WD	-
14	S	1/2"BSP	Z AS 14 R 1/2WD	-	Z STA AS 14 R 1/2WD	-
16	S	3/8"BSP	Z AS 16 R 3/8WD	-	Z STA AS 16 R 3/8WD	-
16	S	1/2"BSP	Z AS 16 R 1/2WD	-	Z STA AS 16 R 1/2WD	-
16	S	3/4"BSP	Z AS 16 R 3/4WD	-	Z STA AS 16 R 3/4WD	-
20	S	1/2"BSP	Z AS 20 R 1/2WD	-	Z STA AS 20 R 1/2WD	-
20	S	3/4"BSP	Z AS 20 R 3/4WD	-	Z STA AS 20 R 3/4WD	-
25	S	3/4" BSP	Z AS 25 R 3/4WD	-	Z STA AS 25 R 3/4WD	-
25	S	1"BSP	Z AS 25 R 1WD	-	Z STA AS 25 R 1WD	-
25	S	1"1/4BSP	Z AS 25 R 1 1/4WD	-	Z STA AS 25 R 1 1/4WD	-
30	S	1"BSP	Z AS 30 R 1WD	-	Z STA AS 30 R 1WD	-
30	S	1"1/4 BSP	Z AS 30 R 1 1/4WD	-	Z STA AS 30 R 1 1/4WD	-
30	S	1"1/2BSP	Z AS 30 R 1 1/2WD	-	Z STA AS 30 R 1 1/2WD	-
38	S	1"1/4BSP	Z AS 38 R 1 1/4WD	-	Z STA AS 38 R 1 1/4WD	-
38	S	1"1/2BSP	Z AS 38 R 1 1/2WD	-	Z STA AS 38 R 1 1/2WD	-

Racores DIN 2353

DIN 2353 Pipe fittings
Raccords à bague DIN 2353
Raccordi DIN 2353

Racor recto rosca cilíndrica BSP

Straight male stud coupling BSP cylindrical

Raccord union simple gaz cylindrique mâle

Raccordo di estremitá diritto BSP

TUBO PIPE	SERIE SERIES	ROSCA THREAD	Referencia Part n°	€	Referencia STA Part N° STA	€
6	LL	1/8" BSP	**Z ALL 6 R 1/8**	-	---	-
10	L	1/8" BSP	**Z AL 10 R 1/8**	-	---	-
15	L	3/4" BSP	**Z AL 15 R 3/4**	-	---	-
6	S	1/4" BSP	**Z AS 6 R 1/4**	-	**Z STA AS 6 R 1/4**	-
8	S	1/4" BSP	**Z AS 8 R 1/4**	-	**Z STA AS 8 R 1/4**	-
8	S	1/2" BSP	**Z AS 8 R 1/2**	27,25	---	*
10	S	1/4" BSP	**Z AS 10 R 1/4**	-	**Z STA AS 10 R 1/4**	-
10	S	3/8" BSP	**Z AS 10 R 3/8**	-	**Z STA AS 10 R 3/8**	-
38	S	1"1/4 BSP	**Z AS 38 R 1 1/4**	-	**Z STA AS 38 R 1 1/4**	-

Hasta fin de existencias */ Until end of stock /* Jusqu´à la fin du stock */ Fino ad esaurimento*

Racor recto rosca cilíndrica Métrica con junta

Straight male stud coupling Metric cylindrical with captive seal

Raccord union simple mâle cylindrique Métrique avec joint plat

Raccordo di estremitá diritto Metrico con guarnizione

TUBO PIPE	SERIE SERIES	ROSCA THREAD	Referencia Part n°	€	Referencia STA Part N° STA	€
6	L	M10x1	**Z AL 6 M 10X1 WD**	-	**Z STA AL 6 M 10X1 WD**	-
8	L	M12x1.5	**Z AL 8 M 12X1.5 WD**	-	**Z STA AL 8 M 12X1.5 WD**	-
10	L	M12x1.5	**Z AL 10 M 12X1.5 WD**	-	**Z STA AL 10 M 12X1.5 WD**	-
10	L	M14x1.5	**Z AL 10 M 14X1.5 WD**	-	**Z STA AL 10 M 14X1.5 WD**	-
10	L	M16x1.5	**Z AL 10 M 16X1.5 WD**	-	**Z STA AL 10 M 16X1.5 WD**	-
12	L	M16x1.5	**Z AL 12 M 16X1.5 WD**	-	**Z STA AL 12 M 16X1.5 WD**	-
12	L	M18x1.5	**Z AL 12 M 18X1.5 WD**	-	**Z STA AL 12 M 18X1.5 WD**	-
12	L	M22x1.5	**Z AL 12 M 22X1.5 WD**	-	**Z STA AL 12 M 22X1.5 WD**	-
15	L	M18x1.5	**Z AL 15 M 18X1.5 WD**	-	**Z STA AL 15 M 18X1.5 WD**	-
18	L	M22x1.5	**Z AL 18 M 22X1.5 WD**	-	**Z STA AL 18 M 22X1.5 WD**	-
22	L	M26x1.5	**Z AL 22 M 26X1.5 WD**	-	**Z STA AL 22 M 26X1.5 WD**	-
28	L	M33x2	**Z AL 28 M 33X2 WD**	-	**Z STA AL 28 M 33X2 WD**	-
35	L	M42x2	**Z AL 35 M 42X2 WD**	-	**Z STA AL 35 M 42X2 WD**	-
42	L	M48x2	**Z AL 42 M 48X2 WD**	-	**Z STA AL 42 M 48X2 WD**	-
6	S	M12x1.5	**Z AS 6 M 12X1.5 WD**	-	**Z STA AS 6 M 12X1.5 WD**	-
6	S	M14x1.5	**Z AS 6 M 14X1.5 WD**	-	**Z STA AS 6 M 14X1.5 WD**	-
8	S	M14x1.5	**Z AS 8 M 14X1.5 WD**	-	**Z STA AS 8 M 14X1.5 WD**	-
10	S	M16x1.5	**Z AS 10 M 16X1.5 WD**	-	**Z STA AS 10 M 16X1.5 WD**	-
12	S	M14x1.5	**Z AS 12 M 14X1.5 WD**	-	**Z STA AS 12 M 14X1.5 WD**	-
12	S	M18x1.5	**Z AS 12 M 18X1.5 WD**	-	**Z STA AS 12 M 18X1.5 WD**	-
14	S	M20x1.5	**Z AS 14 M 20X1.5 WD**	-	**Z STA AS 14 M 20X1.5 WD**	-
16	S	M22x1.5	**Z AS 16 M 22X1.5 WD**	-	**Z STA AS 16 M 22X1.5 WD**	-
20	S	M27x2	**Z AS 20 M 27X2 WD**	-	**Z STA AS 20 M 27X2 WD**	-
25	S	M33x2	**Z AS 25 M 33X2 WD**	-	**Z STA AS 25 M 33X2 WD**	-
30	S	M42x2	**Z AS 30 M 42X2 WD**	-	**Z STA AS 30 M 42X2 WD**	-
38	S	M48x2	**Z AS 38 M 48X2 WD**	-	**Z STA AS 38 M 48X2 WD**	-

Racor recto rosca UNF

Straight male stud coupling UNF

Raccord union simple mâle UNF

Raccordo di estremitá diritto UNF

TUBO PIPE	SERIE SERIES	ROSCA THREAD	Referencia Part n°	€	Referencia STA Part N° STA	€
8	L	7/16" UNF	**Z AL 8 7/16 UNF**	-	**Z STA AL 8 7/16 UNF**	-
10	L	7/16" UNF	**Z AL 10 7/16 UNF**	-	**Z STA AL 10 7/16 UNF**	-
12	L	3/4" UNF	**Z AL 12 3/4 UNF**	-	**Z STA AL 12 3/4 UNF**	-
12	L	9/16" UNF	**Z AL 12 9/16 UNF**	-	**Z STA AL 12 9/16 UNF**	-
15	L	3/4" UNF	**Z AL 15 3/4 UNF**	-	**Z STA AL 15 3/4 UNF**	-
18	L	7/8" UNF	**Z AL 18 7/8 UNF**	-	**Z STA AL 18 7/8 UNF**	-
22	L	1" 1/16 UNF	**Z AL 22 1 1/16 UNF**	-	**Z STA AL 22 1 1/16 UNF**	-
28	L	1" 5/16 UNF	**Z AL 28 1 5/16 UNF**	-	**Z STA AL 28 1 5/16 UNF**	-
35	L	1" 5/8 UNF	**Z AL 35 1 5/8 UNF**	-	**Z STA AL 35 1 5/8 UNF**	-
8	S	7/16" UNF	**Z AS 8 7/16 UNF**	-	**Z STA AS 8 7/16 UNF**	-
10	S	9/16" UNF	**Z AS 10 9/16 UNF**	-	**Z STA AS 10 9/16 UNF**	-
12	S	9/16" UNF	**Z AS 12 9/16 UNF**	-	**Z STA AS 12 9/16 UNF**	-
16	S	3/4" UNF	**Z AS 16 3/4 UNF**	-	**Z STA AS 16 3/4 UNF**	-
20	S	7/8" UNF	**Z AS 20 7/8 UNF**	-	**Z STA AS 20 7/8 UNF**	-
20	S	1" 1/16 UNF	**Z AS 20 1 1/16 UNF**	-	**Z STA AS 20 1 1/16 UNF**	-
25	S	1" 5/16 UNF	**Z AS 25 1 5/16 UNF**	-	**Z STA AS 25 1 5/16 UNF**	-
30	S	1" 5/16 UNF	**Z AS 30 1 5/16 UNF**	-	**Z STA AS 30 1 5/16 UNF**	-
38	S	1" 5/8 UNF	**Z AS 38 1 5/8 UNF**	-	**Z STA AS 38 1 5/8 UNF**	-

Racores DIN 2353

DIN 2353 Pipe fittings
Raccords à bague DIN 2353
Raccordi DIN 2353

Racor recto rosca cónica NPT

Straight male stud coupling NPT

Raccord union simple mâle NPT

Raccordo di estremitá diritto conico NPT

TUBO PIPE	SERIE SERIES	ROSCA THREAD	Referencia Part n°	€	Referencia STA Part N° STA	€
6	L	1/8"NPT	**Z AKL 6 1/8 NPT**	-	**Z STA AKL 6 1/8 NPT**	-
6	L	1/4"NPT	**Z AKL 6 1/4 NPT**	-	**Z STA AKL 6 1/4 NPT**	-
6	L	3/8"NPT	**Z AKL 6 3/8 NPT**	-	**Z STA AKL 6 3/8 NPT**	-
8	L	1/8"NPT	**Z AKL 8 1/8 NPT**	-	**Z STA AKL 8 1/8 NPT**	-
8	L	1/4"NPT	**Z AKL 8 1/4 NPT**	-	**Z STA AKL 8 1/4 NPT**	-
8	L	3/8"NPT	**Z AKL 8 3/8 NPT**	-	**Z STA AKL 8 3/8 NPT**	-
8	L	1/2"NPT	**Z AKL 8 1/2 NPT**	-	**Z STA AKL 8 1/2 NPT**	-
10	L	1/4"NPT	**Z AKL 10 1/4 NPT**	-	**Z STA AKL 10 1/4 NPT**	-
10	L	3/8"NPT	**Z AKL 10 3/8 NPT**	-	**Z STA AKL 10 3/8 NPT**	-
10	L	1/2"NPT	**Z AKL 10 1/2 NPT**	-	**Z STA AKL 10 1/2 NPT**	-
12	L	1/4"NPT	**Z AKL 12 1/4 NPT**	-	**Z STA AKL 12 1/4 NPT**	-
12	L	3/8"NPT	**Z AKL 12 3/8 NPT**	-	**Z STA AKL 12 3/8 NPT**	-
12	L	1/2"NPT	**Z AKL 12 1/2 NPT**	-	**Z STA AKL 12 1/2 NPT**	-
15	L	3/8"NPT	**Z AKL 15 3/8 NPT**	-	**Z STA AKL 15 3/8 NPT**	-
15	L	1/2"NPT	**Z AKL 15 1/2 NPT**	-	**Z STA AKL 15 1/2 NPT**	-
18	L	1/2"NPT	**Z AKL 18 1/2 NPT**	-	**Z STA AKL 18 1/2 NPT**	-
18	L	3/4"NPT	**Z AKL 18 3/4 NPT**	-	**Z STA AKL 18 3/4 NPT**	-
22	L	3/4"NPT	**Z AKL 22 3/4 NPT**	-	**Z STA AKL 22 3/4 NPT**	-
28	L	1"NPT	**Z AKL 28 1 NPT**	-	**Z STA AKL 28 1 NPT**	-
35	L	1"1/4NPT	**Z AKL 35 1 1/4 NPT**	-	**Z STA AKL 35 1 1/4 NPT**	-
42	L	1"1/2NPT	**Z AKL 42 1 1/2 NPT**	-	**Z STA AKL 42 1 1/2 NPT**	-
6	S	1/8"NPT	**Z AKS 6 1/8 NPT**	-	**Z STA AKS 6 1/8 NPT**	-
6	S	1/4"NPT	**Z AKS 6 1/4 NPT**	-	**Z STA AKS 6 1/4 NPT**	-
6	S	3/8"NPT	**Z AKS 6 3/8 NPT**	-	**Z STA AKS 6 3/8 NPT**	-
8	S	1/4"NPT	**Z AKS 8 1/4 NPT**	-	**Z STA AKS 8 1/4 NPT**	-
8	S	3/8"NPT	**Z AKS 8 3/8 NPT**	-	**Z STA AKS 8 3/8 NPT**	-
8	S	1/2"NPT	**Z AKS 8 1/2 NPT**	-	**Z STA AKS 8 1/2 NPT**	-
10	S	1/4"NPT	**Z AKS 10 1/4 NPT**	-	**Z STA AKS 10 1/4 NPT**	-
10	S	3/8"NPT	**Z AKS 10 3/8 NPT**	-	**Z STA AKS 10 3/8 NPT**	-
10	S	1/2"NPT	**Z AKS 10 1/2 NPT**	-	**Z STA AKS 10 1/2 NPT**	-
12	S	1/4"NPT	**Z AKS 12 1/4 NPT**	-	**Z STA AKS 12 1/4 NPT**	-
12	S	3/8"NPT	**Z AKS 12 3/8 NPT**	-	**Z STA AKS 12 3/8 NPT**	-
12	S	1/2"NPT	**Z AKS 12 1/2 NPT**	-	**Z STA AKS 12 1/2 NPT**	-
14	S	1/2"NPT	**Z AKS 14 1/2 NPT**	-	**Z STA AKS 14 1/2 NPT**	-
16	S	1/2"NPT	**Z AKS 16 1/2 NPT**	-	**Z STA AKS 16 1/2 NPT**	-
16	S	3/4"NPT	**Z AKS 16 3/4 NPT**	-	**Z STA AKS 16 3/4 NPT**	-
20	S	1/2"NPT	**Z AKS 20 1/2 NPT**	-	**Z STA AKS 20 1/2 NPT**	-
20	S	3/4"NPT	**Z AKS 20 3/4 NPT**	-	**Z STA AKS 20 3/4 NPT**	-
20	S	1"NPT	**Z AKS 20 1 NPT**	-	**Z STA AKS 20 1 NPT**	-
25	S	3/4"NPT	**Z AKS 25 3/4 NPT**	-	**Z STA AKS 25 3/4 NPT**	-
25	S	1"NPT	**Z AKS 25 1 NPT**	-	**Z STA AKS 25 1 NPT**	-
30	S	1"NPT	**Z AKS 30 1 NPT**	-	**Z STA AKS 30 1 NPT**	-
30	S	1"1/4NPT	**Z AKS 30 1 1/4 NPT**	-	**Z STA AKS 30 1 1/4 NPT**	-
38	S	1"1/2NPT	**Z AKS 38 1 1/2 NPT**	-	**Z STA AKS 38 1 1/2 NPT**	-

Racor recto rosca cónica BSPT

Straight male stud coupling BSPT

Raccord union simple mâle conique

Raccordo di estremitá diritto conico BSPT

TUBO PIPE	SERIE SERIES	ROSCA THREAD	Referencia Part n°	€	Referencia STA Part N° STA	€
6	LL	1/8" BSPT	**Z AKLL 6 R 1/8**	-	---	-
8	LL	1/8" BSPT	**Z AKLL 8 R 1/8**	-	---	-
6	L	1/8" BSPT	**Z AKL 6 R 1/8**	-	**Z STA AKL 6 R 1/8**	-
6	L	1/4" BSPT	**Z AKL 6 R 1/4**	-	**Z STA AKL 6 R 1/4**	-
8	L	1/8" BSPT	**Z AKL 8 R 1/8**	-	**Z STA AKL 8 R 1/8**	-
8	L	1/4" BSPT	**Z AKL 8 R 1/4**	-	**Z STA AKL 8 R 1/4**	-
6	L	3/8" BSPT	**Z AKL 6 R 3/8**	-	**Z STA AKL 6 R 3/8**	-
8	L	3/8" BSPT	**Z AKL 8 R 3/8**	-	**Z STA AKL 8 R 3/8**	-
10	L	1/4" BSPT	**Z AKL 10 R 1/4**	-	**Z STA AKL 10 R 1/4**	-
10	L	3/8" BSPT	**Z AKL 10 R 3/8**	-	**Z STA AKL 10 R 3/8**	-
10	L	1/2" BSPT	**Z AKL 10 R 1/2**	-	**Z STA AKL 10 R 1/2**	-
12	L	1/4" BSPT	**Z AKL 12 R 1/4**	-	**Z STA AKL 12 R 1/4**	-
12	L	3/8" BSPT	**Z AKL 12 R 3/8**	-	**Z STA AKL 12 R 3/8**	-
12	L	1/2" BSPT	**Z AKL 12 R 1/2**	-	**Z STA AKL 12 R 1/2**	-
15	L	3/8" BSPT	**Z AKL 15 R 3/8**	-	**Z STA AKL 15 R 3/8**	-
15	L	1/2" BSPT	**Z AKL 15 R 1/2**	-	**Z STA AKL 15 R 1/2**	-
18	L	1/2" BSPT	**Z AKL 18 R 1/2**	-	**Z STA AKL 18 R 1/2**	-
22	L	3/4" BSPT	**Z AKL 22 R 3/4**	-	**Z STA AKL 22 R 3/4**	-
28	L	1" BSPT	**Z AKL 28 R 1**	-	**Z STA AKL 28 R 1**	-
35	L	1"1/4 BSPT	**Z AKL 35 R 1 1/4**	-	**Z STA AKL 35 R 1 1/4**	-
42	L	1"1/4 BSPT	**Z AKL 42 R 1 1/4**	-	**Z STA AKL 42 R 1 1/4**	-
6	S	1/4" BSPT	**Z AKS 6 R 1/4**	-	**Z STA AKS 6 R 1/4**	-
8	S	1/4" BSPT	**Z AKS 8 R 1/4**	-	**Z STA AKS 8 R 1/4**	-
10	S	3/8" BSPT	**Z AKS 10 R 3/8**	-	**Z STA AKS 10 R 3/8**	-
14	S	1/2" BSPT	**Z AKS 14 R 1/2**	-	**Z STA AKS 14 R 1/2**	-
16	S	1/2" BSPT	**Z AKS 16 R 1/2**	-	**Z STA AKS 16 R 1/2**	-
20	S	3/4" BSPT	**Z AKS 20 R 3/4**	-	**Z STA AKS 20 R 3/4**	-
25	S	1" BSPT	**Z AKS 25 R 1**	-	**Z STA AKS 25 R 1**	-
30	S	1"1/4 BSPT	**Z AKS 30 R 1 1/4**	-	**Z STA AKS 30 R 1 1/4**	-

Racor recto rosca cónica Métrica

Straight male stud coupling Metric

Raccord union simple mâle Métrique conique

Raccordo di estremitá diritto Metrico conico

TUBO PIPE	SERIE SERIES	ROSCA THREAD	Referencia Part n°	€
6	LL	M10X1	**Z AKLL 6 M10X1**	-
6	L	M10X1	**Z AKL 6 M 10X1**	-
8	L	M12X1.5	**Z AKL 8 M 12X1.5**	-
10	L	M14X1.5	**Z AKL 10 M 14X1.5**	-
12	L	M16X1.5	**Z AKL 12 M 16X1.5**	-
15	L	M18X1.5	**Z AKL 15 M 18X1.5**	-
18	L	M22X1.5	**Z AKL 18 M 22X1.5**	-
22	L	M26X1.5	**Z AKL 22 M 26X1.5**	-

Racores DIN 2353

DIN 2353 Pipe fittings
Raccords à bague DIN 2353
Raccordi DIN 2353

Racor en codo rosca cónica BSPT

Male stud elbow BSPT

Raccord union coude mâle gaz conique

Raccordo di estremitá 90° conico BSPT

TUBO PIPE	SERIE SERIES	ROSCA THREAD	Referencia Part n°	€	Referencia STA Part N° STA	€
6	LL	1/8" BSPT	**Z CKLL 6 R 1/8**	-	---	-
6	L	1/8" BSPT	**Z CKL 6 R 1/8**	-	**Z STA CKL 6 R 1/8**	-
6	L	1/4" BSPT	**Z CKL 6 R 1/4**	-	**Z STA CKL 6 R 1/4**	-
8	L	1/8" BSPT	**Z CKL 8 R 1/8**	-	**Z STA CKL 8 R 1/8**	-
8	L	1/4" BSPT	**Z CKL 8 R 1/4**	-	**Z STA CKL 8 R 1/4**	-
8	L	3/8" BSPT	**Z CKL 8 R 3/8**	-	**Z STA CKL 8 R 3/8**	-
8	L	1/2" BSPT	**Z CKL 8 R 1/2**	-	**Z STA CKL 8 R 1/2**	-
10	L	1/8" BSPT	**Z CKL 10 R 1/8**	-	**Z STA CKL 10 R 1/8**	-
10	L	1/4" BSPT	**Z CKL 10 R 1/4**	-	**Z STA CKL 10 R 1/4**	-
10	L	3/8" BSPT	**Z CKL 10 R 3/8**	-	**Z STA CKL 10 R 3/8**	-
10	L	1/2" BSPT	**Z CKL 10 R 1/2**	-	**Z STA CKL 10 R 1/2**	-
12	L	1/4" BSPT	**Z CKL 12 R 1/4**	-	**Z STA CKL 12 R 1/4**	-
12	L	3/8" BSPT	**Z CKL 12 R 3/8**	-	**Z STA CKL 12 R 3/8**	-
12	L	1/2" BSPT	**Z CKL 12 R 1/2**	-	**Z STA CKL 12 R 1/2**	-
15	L	3/8" BSPT	**Z CKL 15 R 3/8**	-	**Z STA CKL 15 R 3/8**	-
15	L	1/2" BSPT	**Z CKL 15 R 1/2**	-	**Z STA CKL 15 R 1/2**	-
18	L	1/2" BSPT	**Z CKL 18 R 1/2**	-	**Z STA CKL 18 R 1/2**	-
22	L	3/4" BSPT	**Z CKL 22 R 3/4**	-	**Z STA CKL 22 R 3/4**	-
28	L	1" BSPT	**Z CKL 28 R 1**	-	**Z STA CKL 28 R 1**	-
35	L	1"1/4 BSPT	**Z CKL 35 R 1 1/4**	-	**Z STA CKL 35 R 1 1/4**	-
6	S	1/4" BSPT	**Z CKS 6 R 1/4**	-	**Z STA CKS 6 R 1/4**	-
8	S	1/4" BSPT	**Z CKS 8 R 1/4**	-	**Z STA CKS 8 R 1/4**	-
8	S	3/8" BSPT	**Z CKS 8 R 3/8***	-	---	-
8	S	1/2" BSPT	**Z CKS 8 R 1/2**	-	**Z STA CKS 8 R 1/2**	-
10	S	1/4" BSPT	**Z CKS 10 R 1/4**	-	**Z STA CKS 10 R 1/4**	-
10	S	3/8" BSPT	**Z CKS 10 R 3/8**	-	**Z STA CKS 10 R 3/8**	-
10	S	1/2" BSPT	**Z CKS 10 R 1/2***	-	---	-
12	S	3/8" BSPT	**Z CKS 12 R 3/8**	-	**Z STA CKS 12 R 3/8**	-
14	S	1/2" BSPT	**Z CKS 14 R 1/2**	-	**Z STA CKS 14 R 1/2**	-
16	S	1/2" BSPT	**Z CKS 16 R 1/2**	-	**Z STA CKS 16 R 1/2**	-
20	S	3/4" BSPT	**Z CKS 20 R 3/4**	-	**Z STA CKS 20 R 3/4**	-
25	S	1" BSPT	**Z CKS 25 R 1**	-	**Z STA CKS 25 R 1**	-
30	S	1"1/4 BSPT	**Z CKS 30 R 1 1/4**	-	**Z STA CKS 30 R 1 1/4**	-
38	S	1"1/2 BSPT	**Z CKS 38 R 1 1/2**	-	**Z STA CKS 38 R 1 1/2**	-

*** Hasta fin de existencias** / *Until end of stock* / Jusqu´à la fin du stock / *Fino ad esaurimento*

Racor en codo orientable BSP

90° Adjustable male stud elbow BSP

Coude orientable mâle BSP

Raccordo di estemità 90° orientabile BSP

TUBO PIPE	SERIE SERIES	ROSCA THREAD	Referencia Part n°	€	Referencia STA Part N° STA	€
6	L	1/8" BSP	**Z WEE 6L R 1/8**	-	**Z STA WEE 6L R 1/8**	-
8	L	1/4" BSP	**Z WEE 8L R 1/4**	-	**Z STA WEE 8L R 1/4**	-
10	L	1/4" BSP	**Z WEE 10L R 1/4**	-	**Z STA WEE 10L R 1/4**	-
12	L	3/8" BSP	**Z WEE 12L R 3/8**	-	**Z STA WEE 12L R 3/8**	-
15	L	1/2" BSP	**Z WEE 15L R 1/2**	-	**Z STA WEE 15L R 1/2**	-
18	L	1/2" BSP	**Z WEE 18L R 1/2**	-	**Z STA WEE 18L R 1/2**	-
22	L	3/4" BSP	**Z WEE 22L R 3/4**	-	**Z STA WEE 22L R 3/4**	-
6	S	1/4" BSP	**Z WEE 6S R 1/4**	-	**Z STA WEE 6S R 1/4**	-
8	S	1/4" BSP	**Z WEE 8S R 1/4**	-	**Z STA WEE 8S R 1/4**	-
10	S	3/8" BSP	**Z WEE 10S R 3/8**	-	**Z STA WEE 10S R 3/8**	-
12	S	3/8" BSP	**Z WEE 12S R 3/8**	-	**Z STA WEE 12S R 3/8**	-
16	S	1/2" BSP	**Z WEE 16S R 1/2**	-	**Z STA WEE 16S R 1/2**	-
20	S	3/4" BSP	**Z WEE 20S R 3/4**	-	**Z STA WEE 20S R 3/4**	-
25	S	1" BSP	**Z WEE 25S R 1**	-	**Z STA WEE 25S R 1**	-

Racor en codo rosca cónica NPT

Male stud elbow NPT

Raccord union coude mâle NPT

Raccordo di estremitá 90° conico NPT

TUBO PIPE	SERIE SERIES	ROSCA THREAD	Referencia Part n°	€	Referencia STA Part N° STA	€
6	L	1/8" NPT	**Z CKL 6 1/8 NPT**	-	**Z STA CKL 6 1/8 NPT**	-
6	L	1/4" NPT	**Z CKL 6 1/4 NPT**	-	**Z STA CKL 6 1/4 NPT**	-
8	L	1/4" NPT	**Z CKL 8 1/4 NPT**	-	**Z STA CKL 8 1/4 NPT**	-
10	L	1/4" NPT	**Z CKL 10 1/4 NPT**	-	**Z STA CKL 10 1/4 NPT**	-
12	L	1/4" NPT	**Z CKL 12 1/4 NPT**	-	**Z STA CKL 12 1/4 NPT**	-
12	L	3/8" NPT	**Z CKL 12 3/8 NPT**	-	**Z STA CKL 12 3/8 NPT**	-
12	L	1/2" NPT	**Z CKL 12 1/2 NPT**	-	**Z STA CKL 12 1/2 NPT**	-
15	L	1/2" NPT	**Z CKL 15 1/2 NPT**	-	**Z STA CKL 15 1/2 NPT**	-
18	L	1/2" NPT	**Z CKL 18 1/2 NPT**	-	**Z STA CKL 18 1/2 NPT**	-
22	L	3/4" NPT	**Z CKL 22 3/4 NPT**	-	**Z STA CKL 22 3/4 NPT**	-
28	L	1" NPT	**Z CKL 28 1 NPT**	-	**Z STA CKL 28 1 NPT**	-
35	L	1"1/4 NPT	**Z CKL 35 1 1/4 NPT**	-	**Z STA CKL 35 1 1/4 NPT**	-
42	L	1"1/2 NPT	**Z CKL 42 1 1/2 NPT**	-	**Z STA CKL 42 1 1/2 NPT**	-
6	S	1/4" NPT	**Z CKS 6 1/4 NPT**	-	**Z STA CKS 6 1/4 NPT**	-
8	S	1/4" NPT	**Z CKS 8 1/4 NPT**	-	**Z STA CKS 8 1/4 NPT**	-
10	S	3/8" NPT	**Z CKS 10 3/8 NPT**	-	**Z STA CKS 10 3/8 NPT**	-
12	S	3/8" NPT	**Z CKS 12 3/8 NPT**	-	**Z STA CKS 12 3/8 NPT**	-
12	S	1/2" NPT	**Z CKS 12 1/2 NPT**	-	**Z STA CKS 12 1/2 NPT**	-
14	S	1/2" NPT	**Z CKS 14 1/2 NPT**	-	**Z STA CKS 14 1/2 NPT**	-
16	S	1/2" NPT	**Z CKS 16 1/2 NPT**	-	**Z STA CKS 16 1/2 NPT**	-
20	S	3/4" NPT	**Z CKS 20 3/4 NPT**	-	**Z STA CKS 20 3/4 NPT**	-
25	S	1" NPT	**Z CKS 25 1 NPT**	-	**Z STA CKS 25 1 NPT**	-
30	S	1"1/4 NPT	**Z CKS 30 1 1/4 NPT**	-	**Z STA CKS 30 1 1/4 NPT**	-
38	S	1"1/2 NPT	**Z CKS 38 1 1/2 NPT**	-	**Z STA CKS 38 1 1/2 NPT**	-

Racor en codo rosca cónica Métrica

Male stud elbow metrical conical

Raccord équerre mâle métrique

Raccordo di estremitá a 90° Metrico conico

TUBO PIPE	SERIE SERIES	ROSCA THREAD	Referencia Part n°	€
6	L	M10X1	**Z CKL 6 M 10X1**	-
8	L	M12X1.5	**Z CKL 8 M 12X1.5**	-
10	L	M14X1.5	**Z CKL 10 M 14X1.5**	-
12	L	M16X1.5	**Z CKL 12 M 16X1.5**	-
15	L	M18X1.5	**Z CKL 15 M 18X1.5**	-
18	L	M22X1.5	**Z CKL 18 M 22X1.5**	-
6	S	M12X1.5	**Z CKS 6 M 12X1.5**	-
8	S	M14X1.5	**Z CKS 8 M 14X1.5**	-
10	S	M16X1.5	**Z CKS 10 M 16X1.5**	-
12	S	M18X1.5	**Z CKS 12 M 18X1.5**	-
14	S	M20X1.5	**Z CKS 14 M 20X1.5**	-
16	S	M22X1.5	**Z CKS 16 M 22X1.5**	-

Racores DIN 2353

DIN 2353 Pipe fittings
Raccords à bague DIN 2353
Raccordi DIN 2353

Racor en L rosca cónica BSPT

Male stud barrel TEE BSPT

Raccord TÉ mâle gaz conique latéral

Raccordo di estremitá a L conico BSPT

TUBO PIPE	SERIE SERIES	ROSCA THREAD	Referencia Part n°	€
6	L	1/8" BSPT	**Z LKL 6 R 1/8**	-
8	L	1/4" BSPT	**Z LKL 8 R 1/4**	-
10	L	1/4" BSPT	**Z LKL 10 R 1/4**	-
12	L	3/8" BSPT	**Z LKL 12 R 3/8**	-
15	L	1/2" BSPT	**Z LKL 15 R 1/2**	-
18	L	1/2" BSPT	**Z LKL 18 R 1/2**	-
6	S	1/4" BSPT	**Z LKS 6 R 1/4**	-
8	S	1/4" BSPT	**Z LKS 8 R 1/4**	-
10	S	3/8" BSPT	**Z LKS 10 R 3/8**	-
12	S	3/8" BSPT	**Z LKS 12 R 3/8**	-
14	S	1/2" BSPT	**Z LKS 14 R 1/2**	-
16	S	1/2" BSPT	**Z LKS 16 R 1/2**	-

Racor en L rosca cónica Métrica

Male stud barrel TEE Metric

Raccord Té mâle Métrique latéral

Raccordo di estremitá a L Metrico conico

TUBO PIPE	SERIE SERIES	ROSCA THREAD	Referencia Part n°	€
6	L	M10X1	**Z LKL 6 M 10X1**	-
8	L	M12X1.5	**Z LKL 8 M 12X1.5**	-
10	L	M14X1.5	**Z LKL 10 M 14X1.5**	-
12	L	M16X1.5	**Z LKL 12 M 16X1.5**	-
15	L	M18X1.5	**Z LKL 15 M 18X1.5**	-
18	L	M22X1.5	**Z LKL 18 M 22X1.5**	-
6	S	M12X1.5	**Z LKS 6 M 12X1.5**	-
8	S	M14X1.5	**Z LKS 8 M 14X1.5**	-
10	S	M16X1.5	**Z LKS 10 M 16X1.5**	-
12	S	M18X1.5	**Z LKS 12 M 18X1.5**	-
14	S	M20X1.5	**Z LKS 14 M 20X1.5**	-
16	S	M22X1.5	**Z LKS 16 M 22X1.5**	-

Racor en T rosca cónica BSPT

Male stud branch TEE BSPT

Raccord TÉ mâle gaz conique au centre

Raccordo di estremitá a T conico BSPT

TUBO PIPE	SERIE SERIES	ROSCA THREAD	Referencia Part n°	€
6	L	1/8" BSPT	**Z FKL 6 R 1/8**	-
8	L	1/8" BSPT	**Z FKL 8 R 1/8***	-
8	L	1/4" BSPT	**Z FKL 8 R 1/4**	-
10	L	1/4" BSPT	**Z FKL 10 R 1/4**	-
12	L	3/8" BSPT	**Z FKL 12 R 3/8**	-
15	L	1/2" BSPT	**Z FKL 15 R 1/2**	-
18	L	1/2" BSPT	**Z FKL 18 R 1/2**	-
6	S	1/4" BSPT	**Z FKS 6 R 1/4**	-
8	S	1/4" BSPT	**Z FKS 8 R 1/4**	-
10	S	3/8" BSPT	**Z FKS 10 R 3/8**	-
12	S	3/8" BSPT	**Z FKS 12 R 3/8**	-
14	S	1/2" BSPT	**Z FKS 14 R 1/2**	-

***Hasta fin de existencias** / *Until end of stock* / Jusqu'à la fin du stock / *Fino ad esaurimento*

Racor en T rosca cónica Métrica

Male stud branch TEE Metrical

Raccord TÉ mâle Métrique au centre

Raccordo di estremitá a T Metrico conico

TUBO PIPE	SERIE SERIES	ROSCA THREAD	Referencia Part n°	€
6	L	M10X1	**Z FKL 6 M 10X1**	-
8	L	M12X1.5	**Z FKL 8 M 12X1.5**	-
10	L	M14X1.5	**Z FKL 10 M 14X1.5**	-
12	L	M16X1.5	**Z FKL 12 M 16X1.5**	-
15	L	M18X1.5	**Z FKL 15 M 18X1.5**	-
6	S	M12X1.5	**Z FKS 6 M 12X1.5**	-
8	S	M14X1.5	**Z FKS 8 M 14X1.5**	-
10	S	M16X1.5	**Z FKS 10 M 16X1.5**	-
12	S	M18X1.5	**Z FKS 12 M 18X1.5**	-
14	S	M20X1.5	**Z FKS 14 M 20X1.5**	-
16	S	M22X1.5	**Z FKS 16 M 22X1.5**	-

***Consultar** / On request/ **Sur demande** / Su richiesta

Racores DIN 2353

DIN 2353 Pipe fittings
Raccords à bague DIN 2353
Raccordi DIN 2353

Racor de reducción con TL Métrica (serie ligera)

Standpipe reducer swivel female (light series)

Raccord union simple femelle tournante Métrique (série légère)

Raccordo di riduzione con dado pre-montato (serie leggera L)

TUBO PIPE	TUBO PIPE	SERIE SERIES	Referencia Part n°	€	Referencia Part n°	€
8	6	L	**Z KORL 8-6 TLM**	-	**Z STA KORL 8-6 TLM**	-
10	6	L	**Z KORL 10-6 TLM**	-	**Z STA KORL 10-6 TLM**	-
10	8	L	**Z KORL 10-8 TLM**	-	**Z STA KORL 10-8 TLM**	-
12	6	L	**Z KORL 12-6 TLM**	-	**Z STA KORL 12-6 TLM**	-
12	8	L	**Z KORL 12-8 TLM**	-	**Z STA KORL 12-8 TLM**	-
12	10	L	**Z KORL 12-10 TLM**	-	**Z STA KORL 12-10 TLM**	-
15	6	L	**Z KORL 15-6 TLM**	-	**Z STA KORL 15-6 TLM**	-
15	8	L	**Z KORL 15-8 TLM**	-	**Z STA KORL 15-8 TLM**	-
15	10	L	**Z KORL 15-10 TLM**	-	**Z STA KORL 15-10 TLM**	-
15	12	L	**Z KORL 15-12 TLM**	-	**Z STA KORL 15-12 TLM**	-
18	8	L	**Z KORL 18-8 TLM**	-	**Z STA KORL 18-8 TLM**	-
18	10	L	**Z KORL 18-10 TLM**	-	**Z STA KORL 18-10 TLM**	-
18	12	L	**Z KORL 18-12 TLM**	-	**Z STA KORL 18-12 TLM**	-
18	15	L	**Z KORL 18-15 TLM**	-	**Z STA KORL 18-15 TLM**	-
22	10	L	**Z KORL 22-10 TLM**	-	**Z STA KORL 22-10 TLM**	-
22	12	L	**Z KORL 22-12 TLM**	-	**Z STA KORL 22-12 TLM**	-
22	15	L	**Z KORL 22-15 TLM**	-	**Z STA KORL 22-15 TLM**	-
22	18	L	**Z KORL 22-18 TLM**	-	**Z STA KORL 22-18 TLM**	-
28	10	L	**Z KORL 28-10 TLM**	-	**Z STA KORL 28-10 TLM**	-
28	12	L	**Z KORL 28-12 TLM**	-	**Z STA KORL 28-12 TLM**	-
28	15	L	**Z KORL 28-15 TLM**	-	**Z STA KORL 28-15 TLM**	-
28	18	L	**Z KORL 28-18 TLM**	-	**Z STA KORL 28-18 TLM**	-
28	22	L	**Z KORL 28-22 TLM**	-	**Z STA KORL 28-22 TLM**	-
35	12	L	**Z KORL 35-12 TLM**	-	**Z STA KORL 35-12 TLM**	-
35	22	L	**Z KORL 35-22 TLM**	-	**Z STA KORL 35-22 TLM**	-
35	28	L	**Z KORL 35-28 TLM**	-	**Z STA KORL 35-28 TLM**	-
42	22	L	**Z KORL 42-22 TLM**	-	**Z STA KORL 42-22 TLM**	-
42	28	L	**Z KORL 42-28 TLM**	-	**Z STA KORL 42-28 TLM**	-
42	35	L	**Z KORL 42-35 TLM**	-	**Z STA KORL 42-35 TLM**	-

Racor de reducción con TL Métrica (serie pesada)

Standpipe reducer swivel female (heavy series)

Raccord union simple femelle tournante Métrique (série lourde)

Raccordo di riduzione con dado pre-montato (serie pesante S)

TUBO PIPE	TUBO PIPE	SERIE SERIES	Referencia Part n°	€	Referencia Part n°	€
8	6	S	**Z KORS 8-6 TLM**	-	**Z STA KORS 8-6 TLM**	-
10	6	S	**Z KORS 10-6 TLM**	-	**Z STA KORS 10-6 TLM**	-
10	8	S	**Z KORS 10-8 TLM**	-	**Z STA KORS 10-8 TLM**	-
12	6	S	**Z KORS 12-6 TLM**	-	**Z STA KORS 12-6 TLM**	-
12	8	S	**Z KORS 12-8 TLM**	-	**Z STA KORS 12-8 TLM**	-
12	10	S	**Z KORS 12-10 TLM**	-	**Z STA KORS 12-10 TLM**	-
14	10	S	**Z KORS 14-10 TLM**	-	**Z STA KORS 14-10 TLM**	-
14	12	S	**Z KORS 14-12 TLM**	-	**Z STA KORS 14-12 TLM**	-
16	6	S	**Z KORS 16-6 TLM**	-	**Z STA KORS 16-6 TLM**	-
16	8	S	**Z KORS 16-8 TLM**	-	**Z STA KORS 16-8 TLM**	-
16	10	S	**Z KORS 16-10 TLM**	-	**Z STA KORS 16-10 TLM**	-
16	12	S	**Z KORS 16-12 TLM**	-	**Z STA KORS 16-12 TLM**	-
20	8	S	**Z KORS 20-8 TLM**	-	**Z STA KORS 20-8 TLM**	-
20	10	S	**Z KORS 20-10 TLM**	-	**Z STA KORS 20-10 TLM**	-
20	12	S	**Z KORS 20-12 TLM**	-	**Z STA KORS 20-12 TLM**	-
20	14	S	**Z KORS 20-14 TLM**	-	**Z STA KORS 20-14 TLM**	-
20	16	S	**Z KORS 20-16 TLM**	-	**Z STA KORS 20-16 TLM**	-
25	12	S	**Z KORS 25-12 TLM**	-	**Z STA KORS 25-12 TLM**	-
25	16	S	**Z KORS 25-16 TLM**	-	**Z STA KORS 25-16 TLM**	-
25	20	S	**Z KORS 25-20 TLM**	-	**Z STA KORS 25-20 TLM**	-
30	16	S	**Z KORS 30-16 TLM**	-	**Z STA KORS 30-16 TLM**	-
30	20	S	**Z KORS 30-20 TLM**	-	**Z STA KORS 30-20 TLM**	-
30	25	S	**Z KORS 30-25 TLM**	-	**Z STA KORS 30-25 TLM**	-
38	20	S	**Z KORS 38-20 TLM**	-	**Z STA KORS 38-20 TLM**	-
38	25	S	**Z KORS 38-25 TLM**	-	**Z STA KORS 38-25 TLM**	-
38	30	S	**Z KORS 38-30 TLM**	-	**Z STA KORS 38-30 TLM**	-

Racores DIN 2353

DIN 2353 Pipe fittings
Raccords à bague DIN 2353
Raccordi DIN 2353

Reducción con rosca M-HF BSP con junta plana

Male-female reducing adaptor BSP cylindrical with flat seal

Raccord réduction mâle gaz-fem gaz avec joint plat

Riduzione filettata maschio con guarnizione piana - femmina BSP

ROSCA (H) THREAD (F)	ROSCA (M) THREAD (M)	Referencia Part n°	€
1/4"BSP	1/8"BSP	**Z RI-R 1/8 R 1/4WD**	-
1/8"BSP	1/4"BSP	**Z RI-R 1/4 R 1/8WD**	-
3/8"BSP	1/4"BSP	**Z RI-R 1/4 R 3/8WD**	-
1/2"BSP	1/4"BSP	**Z RI-R 1/4 R 1/2WD**	-
1/8"BSP	3/8"BSP	**Z RI-R 3/8 R 1/8WD**	-
1/4"BSP	3/8"BSP	**Z RI-R 3/8 R 1/4WD**	-
1/2"BSP	3/8"BSP	**Z RI-R 3/8 R 1/2WD**	-
3/4"BSP	3/8"BSP	**Z RI-R 3/8 R 3/4WD**	-
1/8"BSP	1/2"BSP	**Z RI-R 1/2 R 1/8WD**	-
1/4"BSP	1/2"BSP	**Z RI-R 1/2 R 1/4WD**	-
3/8"BSP	1/2"BSP	**Z RI-R 1/2 R 3/8WD**	-
3/4"BSP	1/2"BSP	**Z RI-R 1/2 R 3/4WD**	-
1/4"BSP	3/4"BSP	**Z RI-R 3/4 R 1/4WD**	-
3/8"BSP	3/4"BSP	**Z RI-R 3/4 R 3/8WD**	-
1/2"BSP	3/4"BSP	**Z RI-R 3/4 R 1/2WD**	-
1"BSP	3/4"BSP	**Z RI-R 3/4 R 1WD**	-
1/4"BSP	1"BSP	**Z RI-R 1 R 1/4WD**	-
3/8"BSP	1"BSP	**Z RI-R 1 R 3/8WD**	-
1/2"BSP	1"BSP	**Z RI-R 1 R 1/2WD**	-
3/4"BSP	1"BSP	**Z RI-R 1 R 3/4WD**	-
1"1/4 BSP	1"BSP	**Z RI-R 1 R 1 1/4WD**	-
1/2"BSP	1"1/4 BSP	**Z RI-R 1 1/4 R 1/2WD**	-
3/4"BSP	1"1/4 BSP	**Z RI-R 1 1/4 R 3/4WD**	-
1"BSP	1"1/4BSP	**Z RI-R 1 1/4 R 1WD**	-
1"1/2 BSP	1"1/4 BSP	**Z RI-R 1 1/4 R 1 1/2WD**	-
1/2"BSP	1"1/2 BSP	**Z RI-R 1 1/2 R 1/2WD**	-
3/4"BSP	1"1/2 BSP	**Z RI-R 1 1/2 R 3/4WD**	-
1"BSP	1"1/2 BSP	**Z RI-R 1 1/2 R 1WD**	-
1"1/4 BSP	1"1/2 BSP	**Z RI-R 1 1/2 R 1 1/4WD**	-
2" BSP	1"1/2 BSP	**Z RI-R 1 1/2 R 2WD**	-
1"1/2 BSP	2" BSP	**Z RI-R 2 R 1 1/2WD**	-

Racores DIN 2353

DIN 2353 Pipe fittings
Raccords à bague DIN 2353
Raccordi DIN 2353

Racor en codo regulable con tuerca y anillo

Adjustable stud elbow with nut and ring

Raccord coude orientable tube lisse équipé

Raccordo orientabile a 90° con dado e anello

TUBO PIPE	SERIE SERIES	Referencia Part n°	€	Referencia STA Part N° STA	€
6	L	**Z EEL 6 CTA**	-	**Z STA EEL 6 CTA**	-
15	L	**Z EEL 15 CTA**	-	**Z STA EEL 15 CTA**	-
35	L	**Z EEL 35 CTA**	-	**Z STA EEL 35 CTA**	-
6	S	**Z EES 6 CTA**	-	**Z STA EES 6 CTA**	-
16	S	**Z EES 16 CTA**	-	**Z STA EES 16 CTA**	-

Hasta fin de existencias / *Until end of stock* / Jusqu´à la fin du stock / *Fino ad esaurimento*

Racor en codo regulable TL Métrica

Adjustable stud elbow with o'ring

Raccord coude orientable Métrique avec o'ring

Raccordo orientabile a 90° con o'ring
(dado spinato)

TUBO PIPE	SERIE SERIES	Referencia Part n°	€	Referencia STA Part N° STA	€
6	L	**Z EEL 6 TLM**	-	**Z STA EEL 6 TLM**	-
8	L	**Z EEL 8 TLM**	-	**Z STA EEL 8 TLM**	-
10	L	**Z EEL 10 TLM**	-	**Z STA EEL 10 TLM**	-
12	L	**Z EEL 12 TLM**	-	**Z STA EEL 12 TLM**	-
15	L	**Z EEL 15 TLM**	-	**Z STA EEL 15 TLM**	-
18	L	**Z EEL 18 TLM**	-	**Z STA EEL 18 TLM**	-
22	L	**Z EEL 22 TLM**	-	**Z STA EEL 22 TLM**	-
28	L	**Z EEL 28 TLM**	-	**Z STA EEL 28 TLM**	-
35	L	**Z EEL 35 TLM**	-	**Z STA EEL 35 TLM**	-
42	L	**Z EEL 42 TLM**	-	**Z STA EEL 42 TLM**	-
6	S	**Z EES 6 TLM**	-	**Z STA EES 6 TLM**	-
8	S	**Z EES 8 TLM**	-	**Z STA EES 8 TLM**	-
10	S	**Z EES 10 TLM**	-	**Z STA EES 10 TLM**	-
12	S	**Z EES 12 TLM**	-	**Z STA EES 12 TLM**	-
14	S	**Z EES 14 TLM**	-	**Z STA EES 14 TLM**	-
16	S	**Z EES 16 TLM**	-	**Z STA EES 16 TLM**	-
20	S	**Z EES 20 TLM**	-	**Z STA EES 20 TLM**	-
25	S	**Z EES 25 TLM**	-	**Z STA EES 25 TLM**	-
30	S	**Z EES 30 TLM**	-	**Z STA EES 30 TLM**	-
38	S	**Z EES 38 TLM**	-	**Z STA EES 38 TLM**	-

Racor en T regulable TL Métrica

Adjustable stud branch TEE with o'ring

Raccord TÉ orientable Métrique avec o'ring

Raccordo orientabile a T con o'ring
(dado spinato)

TUBO PIPE	SERIE SERIES	Referencia Part n°	€	Referencia STA Part N° STA	€
6	L	**Z TEL 6 TLM**	-	**Z STA TEL 6 TLM**	-
8	L	**Z TEL 8 TLM**	-	**Z STA TEL 8 TLM**	-
10	L	**Z TEL 10 TLM**	-	**Z STA TEL 10 TLM**	-
12	L	**Z TEL 12 TLM**	-	**Z STA TEL 12 TLM**	-
15	L	**Z TEL 15 TLM**	-	**Z STA TEL 15 TLM**	-
18	L	**Z TEL 18 TLM**	-	**Z STA TEL 18 TLM**	-
22	L	**Z TEL 22 TLM**	-	**Z STA TEL 22 TLM**	-
28	L	**Z TEL 28 TLM**	-	**Z STA TEL 28 TLM**	-
35	L	**Z TEL 35 TLM**	-	**Z STA TEL 35 TLM**	-
42	L	**Z TEL 42 TLM**	-	**Z STA TEL 42 TLM**	-
6	S	**Z TES 6 TLM**	-	**Z STA TES 6 TLM**	-
8	S	**Z TES 8 TLM**	-	**Z STA TES 8 TLM**	-
10	S	**Z TES 10 TLM**	-	**Z STA TES 10 TLM**	-
12	S	**Z TES 12 TLM**	-	**Z STA TES 12 TLM**	-
14	S	**Z TES 14 TLM**	-	**Z STA TES 14 TLM**	-
16	S	**Z TES 16 TLM**	-	**Z STA TES 16 TLM**	-
20	S	**Z TES 20 TLM**	-	**Z STA TES 20 TLM**	-
25	S	**Z TES 25 TLM**	-	**Z STA TES 25 TLM**	-
30	S	**Z TES 30 TLM**	-	**Z STA TES 30 TLM**	-
38	S	**Z TES 38 TLM**	-	**Z STA TES 38 TLM**	-

Racor en T regulable TL Métrica

Adjustable stud barrel TEE with o'ring

Raccord TÉorientable renversé
Métrique avec o'ring

Raccordo orientabile a T con o'ring
(dado spinato)

TUBO PIPE	SERIE SERIES	ROSCA THREAD	Referencia Part n°	€	Referencia STA Part N° STA	€
6	L	M12X1.5	**Z LEL 6 TLM**	-	**Z STA LEL 6 TLM**	-
8	L	M14X1.5	**Z LEL 8 TLM**	-	**Z STA LEL 8 TLM**	-
10	L	M16X1.5	**Z LEL 10 TLM**	-	**Z STA LEL 10 TLM**	-
12	L	M18X1.5	**Z LEL 12 TLM**	-	**Z STA LEL 12 TLM**	-
15	L	M22X1.5	**Z LEL 15 TLM**	-	**Z STA LEL 15 TLM**	-
18	L	M26X1.5	**Z LEL 18 TLM**	-	**Z STA LEL 18 TLM**	-
22	L	M30X2	**Z LEL 22 TLM**	-	**Z STA LEL 22 TLM**	-
28	L	M36X2	**Z LEL 28 TLM**	-	**Z STA LEL 28 TLM**	-
35	L	M45X2	**Z LEL 35 TLM**	-	**Z STA LEL 35 TLM**	-
42	L	M52X2	**Z LEL 42 TLM**	-	**Z STA LEL 42 TLM**	-
6	S	M14X1.5	**Z LES 6 TLM**	-	**Z STA LES 6 TLM**	-
8	S	M16X1.5	**Z LES 8 TLM**	-	**Z STA LES 8 TLM**	-
10	S	M18X1.5	**Z LES 10 TLM**	-	**Z STA LES 10 TLM**	-
12	S	M20X1.5	**Z LES 12 TLM**	-	**Z STA LES 12 TLM**	-
14	S	M22X1.5	**Z LES 14 TLM**	-	**Z STA LES 14 TLM**	-
16	S	M24X1.5	**Z LES 16 TLM**	-	**Z STA LES 16 TLM**	-
20	S	M30X2	**Z LES 20 TLM**	-	**Z STA LES 20 TLM**	-
25	S	M36X2	**Z LES 25 TLM**	-	**Z STA LES 25 TLM**	-
30	S	M42X2	**Z LES 30 TLM**	-	**Z STA LES 30 TLM**	-
38	S	M52X2	**Z LES 38 TLM**	-	**Z STA LES 38 TLM**	-

Racores DIN 2353

DIN 2353 Pipe fittings
Raccords à bague DIN 2353
Raccordi DIN 2353

Racor unión TL Métrica

Straight connection with o'ring

Raccord union tournante Métrique égale

Raccordo diritto intermedio con o´ring e dadi spinati

TUBO PIPE	SERIE SERIES	Referencia Part n°	€
6	L	**Z ATL 6**	-
8	L	**Z ATL 8**	-
10	L	**Z ATL 10**	-
12	L	**Z ATL 12**	-
15	L	**Z ATL 15**	-
18	L	**Z ATL 18**	-
22	L	**Z ATL 22**	-
28	L	**Z ATL 28**	-
35	L	**Z ATL 35**	-
42	L	**Z ATL 42**	-
6	S	**Z ATS 6**	-
8	S	**Z ATS 8**	-
10	S	**Z ATS 10**	-
12	S	**Z ATS 12**	-
14	S	**Z ATS 14**	-
16	S	**Z ATS 16**	-
20	S	**Z ATS 20**	-
25	S	**Z ATS 25**	-
30	S	**Z ATS 30**	-
38	S	**Z ATS 38**	-

Racor recto macho BSP con junta plana - TLM

Straight stud standpipe adaptor with captive seal BSP cylindrical-metric swivel fem.

Raccord adapt.tube lisse-mâle gaz BSP avec joint plat-fem.tourn.métrique

Raccordo di estremità BSP con guarnizione - dado spinato metrico e o´ring

TUBO PIPE	SERIE SERIES	ROSCA THREAD	Referencia Part n°	€
6	L	1/8"BSP	**Z RAL 6 R 1/8TLMWD**	-
8	L	1/4"BSP	**Z RAL 8 R 1/4TLMWD**	-
10	L	1/4"BSP	**Z RAL 10 R 1/4TLMWD**	-
12	L	1/4"BSP	**Z RAL 12 R 1/4TLMWD**	-
12	L	3/8"BSP	**Z RAL 12 R 3/8TLMWD**	-
12	L	1/2"BSP	**Z RAL 12 R 1/2TLMWD**	-
15	L	1/2"BSP	**Z RAL 15 R 1/2TLMWD**	-
18	L	1/2"BSP	**Z RAL 18 R 1/2TLMWD**	-
22	L	3/4"BSP	**Z RAL 22 R 3/4TLMWD**	-
28	L	1"BSP	**Z RAL 28 R 1TLMWD**	-
35	L	1"1/4 BSP	**Z RAL 35 R 1 1/4TLMWD**	-
42	L	1"1/2 BSP	**Z RAL 42 R 1 1/2TLMWD**	-
6	S	1/4"BSP	**Z RAS 6 R 1/4TLMWD**	-
8	S	1/4"BSP	**Z RAS 8 R 1/4TLMWD**	-
10	S	3/8"BSP	**Z RAS 10 R 3/8TLMWD**	-
12	S	3/8"BSP	**Z RAS 12 R 3/8TLMWD**	-
12	S	1/2"BSP	**Z RAS 12 R 1/2TLMWD**	-
14	S	1/2"BSP	**Z RAS 14 R 1/2TLMWD**	-
16	S	1/2"BSP	**Z RAS 16 R 1/2TLMWD**	-
20	S	3/4"BSP	**Z RAS 20 R 3/4TLMWD**	-
25	S	1"BSP	**Z RAS 25 R 1TLMWD**	-
30	S	1"1/4 BSP	**Z RAS 30 R 1 1/4TLMWD**	-
38	S	1"1/2 BSP	**Z RAS 38 R 1 1/2TLMWD**	-

Racor recto macho NPT - TL Metrica

Straight stud standpipe adaptor NPT- metric swivel fem.

Raccord adapteur tube lisse - mâle NPT- fem. tourn. métrique

Raccordo di estremità conico NPT - dado spinato metrico e o´ring

TUBO PIPE	SERIE SERIES	ROSCA THREAD	Referencia Part n°	€
6	L	1/8"NPT	**Z RAL 6 R 1/8 NPTTLM**	-
8	L	1/4"NPT	**Z RAL 8 R 1/4 NPTTLM**	-
10	L	1/4"NPT	**Z RAL 10 R 1/4 NPTTLM**	-
12	L	3/8" NPT	**Z RAL 12 R 3/8 NPTTLM**	-
15	L	1/2" NPT	**Z RAL 15 R 1/2 NPTTLM**	-
18	L	1/2"NPT	**Z RAL 18 R 1/2 NPTTLM**	-
22	L	3/4"NPT	**Z RAL 22 R 3/4 NPTTLM**	-
28	L	1"NPT	**Z RAL 28 R 1 NPTTLM**	-
35	L	1"1/4 NPT	**Z RAL 35 R 1 1/4 NPTTLM**	-
42	L	1"1/2 NPT	**Z RAL 42 R 1 1/2 NPTTLM**	-
6	S	1/4"NPT	**Z RAS 6 R 1/4 NPTTLM**	-
8	S	1/4"NPT	**Z RAS 8 R 1/4 NPTTLM**	-
10	S	3/8"NPT	**Z RAS 10 R 3/8 NPTTLM**	-
12	S	1/4" NPT	**Z RAS 12 R 1/4 NPTTLM**	-
14	S	1/2"NPT	**Z RAS 14 R 1/2 NPTTLM**	-
16	S	1/2"NPT	**Z RAS 16 R 1/2 NPTTLM**	-
20	S	3/4"NPT	**Z RAS 20 R 3/4 NPTTLM**	-
25	S	3/4"NPT	**Z RAS 25 R 3/4 NPTTLM**	-
25	S	1"NPT	**Z RAS 25 R 1 NPTTLM**	-
30	S	1"NPT	**Z RAS 30 R 1 NPTTLM**	-
30	S	1"1/4 NPT	**Z RAS 30 R 1 1/4 NPTTLM**	-
38	S	1"1/2 NPT	**Z RAS 38 R 1 1/2 NPTTLM**	-

Racor recto macho Métrico con junta plana - tubo TLM

Straight stud standpipe adaptor Metric with captive seal-metric swivel fem.

Raccord adapt.tube lisse-mâle Métrique avec joint plat-fem.tourn.métrique

Raccordo di estremità metrico con guarnizione - dado spinato metrico e o´ring

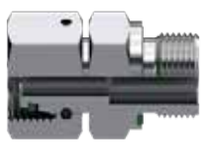

TUBO PIPE	SERIE SERIES	ROSCA THREAD	Referencia Part n°	€
6	L	M10X1	**Z RAL 6M10X1TLMWD**	-
8	L	M12X1.5	**Z RAL 8M12X1.5TLMWD**	-
10	L	M14X1.5	**Z RAL 10M14X1.5TLMWD**	-
12	L	M16X1.5	**Z RAL 12M16X1.5TLMWD**	-
15	L	M18X1.5	**Z RAL 15M18X1.5TLMWD**	-
18	L	M22X1.5	**Z RAL 18M22X1.5TLMWD**	-
22	L	M26X1.5	**Z RAL 22M26X1.5TLMWD**	-
28	L	M33X2	**Z RAL 28M33X2TLMWD**	-
35	L	M42X2	**Z RAL 35M42X2TLMWD**	-
42	L	M48X2	**Z RAL 42M48X2TLMWD**	-
6	S	M12X1.5	**Z RAS 6M12X1.5TLMWD**	-
8	S	M14X1.5	**Z RAS 8M14X1.5TLMWD**	-
10	S	M16X1.5	**Z RAS 10M16X1.5TLMWD**	-
12	S	M18X1.5	**Z RAS 12M18X1.5TLMWD**	-
14	S	M20X1.5	**Z RAS 14M20X1.5TLMWD**	-
16	S	M22X1.5	**Z RAS 16M22X1.5TLMWD**	-
20	S	M27X2	**Z RAS 20M27X2TLMWD**	-
25	S	M33X2	**Z RAS 25M33X2TLMWD**	-
30	S	M42X2	**Z RAS 30M42X2TLMWD**	-
38	S	M48X2	**Z RAS 38M48X2TLMWD**	-

Racores DIN 2353

DIN 2353 Pipe fittings
Raccords à bague DIN 2353
Raccordi DIN 2353

Racor recto para soldar

Weldable straight coupling

Raccord mamelon hexagonal Métrique à souder

Raccordo diritto a saldare

TUBO PIPE	SERIE SERIES	Referencia Part n°	€	Referencia STA Part N° STA	€
6	L	**Z ASL 6**	-	**Z STA ASL 6**	-
8	L	**Z ASL 8**	-	**Z STA ASL 8**	-
10	L	**Z ASL 10**	-	**Z STA ASL 10**	-
12	L	**Z ASL 12**	-	**Z STA ASL 12**	-
15	L	**Z ASL 15**	-	**Z STA ASL 15**	-
18	L	**Z ASL 18**	-	**Z STA ASL 18**	-
22	L	**Z ASL 22**	-	**Z STA ASL 22**	-
28	L	**Z ASL 28**	-	**Z STA ASL 28**	-
35	L	**Z ASL 35**	-	**Z STA ASL 35**	-
42	L	**Z ASL 42**	-	**Z STA ASL 42**	-
6	S	**Z ASS 6**	-	**Z STA ASS 6**	-
8	S	**Z ASS 8**	-	**Z STA ASS 8**	-
10	S	**Z ASS 10**	-	**Z STA ASS 10**	-
12	S	**Z ASS 12**	-	**Z STA ASS 12**	-
14	S	**Z ASS 14**	-	**Z STA ASS 14**	-
16	S	**Z ASS 16**	-	**Z STA ASS 16**	-
20	S	**Z ASS 20**	-	**Z STA ASS 20**	-
25	S	**Z ASS 25**	-	**Z STA ASS 25**	-
30	S	**Z ASS 30**	-	**Z STA ASS 30**	-
38	S	**Z ASS 38**	-	**Z STA ASS 38**	-

Racor pasatabique para soldar

Weldable bulkhead coupling

Raccord union double passe cloison Métrique à souder

Raccordo passaparete a saldare

TUBO PIPE	SERIE SERIES	Referencia Part n°	€	Referencia STA Part N° STA	€
6	L	**Z ESVL 6**	-	**Z STA ESVL 6**	-
8	L	**Z ESVL 8**	-	**Z STA ESVL 8**	-
10	L	**Z ESVL 10**	-	**Z STA ESVL 10**	-
12	L	**Z ESVL 12**	-	**Z STA ESVL 12**	-
15	L	**Z ESVL 15**	-	**Z STA ESVL 15**	-
18	L	**Z ESVL 18**	-	**Z STA ESVL 18**	-
22	L	**Z ESVL 22**	-	**Z STA ESVL 22**	-
28	L	**Z ESVL 28**	-	**Z STA ESVL 28**	-
35	L	**Z ESVL 35**	-	**Z STA ESVL 35**	-
42	L	**Z ESVL 42**	-	**Z STA ESVL 42**	-
6	S	**Z ESVS 6**	-	**Z STA ESVS 6**	-
8	S	**Z ESVS 8**	-	**Z STA ESVS 8**	-
10	S	**Z ESVS 10**	-	**Z STA ESVS 10**	-
12	S	**Z ESVS 12**	-	**Z STA ESVS 12**	-
14	S	**Z ESVS 14**	-	**Z STA ESVS 14**	-
16	S	**Z ESVS 16**	-	**Z STA ESVS 16**	-
20	S	**Z ESVS 20**	-	**Z STA ESVS 20**	-
25	S	**Z ESVS 25**	-	**Z STA ESVS 25**	-
30	S	**Z ESVS 30**	-	**Z STA ESVS 30**	-
38	S	**Z ESVS 38**	-	**Z STA ESVS 38**	-

Boquilla para soldar

Welding nipple with o-ring

Raccord collet cône métrique à souder

Ogiva a saldare con o'ring

TUBO PIPE	SERIE SERIES	Referencia Part n°	€
15x2.5	L	**Z ORIL 15**	-
18x2.5	L	**Z ORIL 18**	-
22x2.5	L	**Z ORIL 22**	-
28x3	L	**Z ORIL 28**	-
35x4	L	**Z ORIL 35**	-
42x3	L	**Z ORIL 42**	-
6x2	L/S	**Z ORIS 6**	-
8x2	L/S	**Z ORIS 8**	-
10x2	L/S	**Z ORIS 10**	-
12x2	L/S	**Z ORIS 12**	-
14x3	S	**Z ORIS 14**	-
16x3	S	**Z ORIS 16**	-
20x3	S	**Z ORIS 20**	-
25x3.5	S	**Z ORIS 25**	-
30x5	S	**Z ORIS 30**	-
38x5	S	**Z ORIS 38**	-

Racores DIN 2353

DIN 2353 Pipe fittings
Raccords à bague DIN 2353
Raccordi DIN 2353

Racor recto pasatabique con tuerca

Straight bulkhead coupling

Raccord droit union double passe cloison avec écrou

Raccordo passaparete

TUBO PIPE	SERIE SERIES	Referencia Part n°	€	Referencia STA Part N° STA	€
6	L	**Z SVL 6**	-	**Z STA SVL 6**	-
8	L	**Z SVL 8**	-	**Z STA SVL 8**	-
10	L	**Z SVL 10**	-	**Z STA SVL 10**	-
12	L	**Z SVL 12**	-	**Z STA SVL 12**	-
15	L	**Z SVL 15**	-	**Z STA SVL 15**	-
18	L	**Z SVL 18**	-	**Z STA SVL 18**	-
22	L	**Z SVL 22**	-	**Z STA SVL 22**	-
28	L	**Z SVL 28**	-	**Z STA SVL 28**	-
35	L	**Z SVL 35**	-	**Z STA SVL 35**	-
42	L	**Z SVL 42**	-	**Z STA SVL 42**	-
6	S	**Z SVS 6**	-	**Z STA SVS 6**	-
8	S	**Z SVS 8**	-	**Z STA SVS 8**	-
10	S	**Z SVS 10**	-	**Z STA SVS 10**	-
12	S	**Z SVS 12**	-	**Z STA SVS 12**	-
14	S	**Z SVS 14**	-	**Z STA SVS 14**	-
16	S	**Z SVS 16**	-	**Z STA SVS 16**	-
20	S	**Z SVS 20**	-	**Z STA SVS 20**	-
25	S	**Z SVS 25**	-	**Z STA SVS 25**	-
30	S	**Z SVS 30**	-	**Z STA SVS 30**	-
38	S	**Z SVS 38**	-	**Z STA SVS 38**	-

Racor en codo pasatabique con tuerca

Elbow bulkhead coupling

Raccord coude égal passe cloison

Raccordo passaparete a 90°

TUBO PIPE	SERIE SERIE	Referencia Part n°	€	Referencia STA Part N° STA	€
6	L	**Z USVL 6**	-	**Z STA USVL 6**	-
8	L	**Z USVL 8**	-	**Z STA USVL 8**	-
10	L	**Z USVL 10**	-	**Z STA USVL 10**	-
12	L	**Z USVL 12**	-	**Z STA USVL 12**	-
15	L	**Z USVL 15**	-	**Z STA USVL 15**	-
18	L	**Z USVL 18**	-	**Z STA USVL 18**	-
22	L	**Z USVL 22**	-	**Z STA USVL 22**	-
28	L	**Z USVL 28**	-	**Z STA USVL 28**	-
35	L	**Z USVL 35**	-	**Z STA USVL 35**	-
42	L	**Z USVL 42**	-	**Z STA USVL 42**	-
6	S	**Z USVS 6**	-	**Z STA USVS 6**	-
8	S	**Z USVS 8**	-	**Z STA USVS 8**	-
10	S	**Z USVS 10**	-	**Z STA USVS 10**	-
12	S	**Z USVS 12**	-	**Z STA USVS 12**	-
14	S	**Z USVS 14**	-	**Z STA USVS 14**	-
16	S	**Z USVS 16**	-	**Z STA USVS 16**	-
20	S	**Z USVS 20**	-	**Z STA USVS 20**	-
25	S	**Z USVS 25**	-	**Z STA USVS 25**	-
30	S	**Z USVS 30**	-	**Z STA USVS 30**	-

Tuerca pasatabique Métrica

Metric nut bulkhead

Écrou Métrique passe cloison

Dado passaparete Metrico

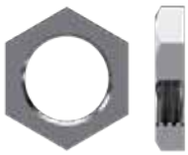

TUBO PIPE	ROSCA THREAD	Referencia Part n°	€
6L	M12x1.5	**KZTPM12**	-
8L / 6S	M14x1.5	**KZTPM14**	-
10L / 8S	M16x1.5	**KZTPM16**	-
12L / 10S	M18x1.5	**KZTPM18**	-
12S	M20x1.5	**KZTPM20**	-
15L / 14S	M22x1.5	**KZTPM22**	-
16S	M24x1.5	**KZTPM24**	-
18L	M26x1.5	**KZTPM26**	-
22L / 20S	M30x2	**KZTPM30**	-
28L / 25S	M36x2	**KZTPM36**	-
30S	M42x2	**KZTPM42**	-
35L	M45x2	**KZTPM45**	-
42L / 38S	M52x2	**KZTPM52**	-

Racores DIN 2353

DIN 2353 Pipe fittings
Raccords à bague DIN 2353
Raccordi DIN 2353

Racor recto hembra rosca BSP

Female stud coupling

Raccord union simple femelle gaz

Raccordo di estremità femmina BSP

TUBO PIPE	SERIE SERIES	ROSCA THREAD	Referencia Part n°	€	Referencia STA Part N° STA	€
6	L	1/8" BSP	**Z GAIL 6 R 1/8**	-	**Z STA GAIL 6 R 1/8**	-
6	L	1/4" BSP	**Z GAIL 6 R 1/4**	-	**Z STA GAIL 6 R 1/4**	-
8	L	1/4" BSP	**Z GAIL 8 R 1/4**	-	**Z STA GAIL 8 R 1/4**	-
10	L	1/4" BSP	**Z GAIL 10 R 1/4**	-	**Z STA GAIL 10 R 1/4**	-
12	L	1/2" BSP	**Z GAIL 12 R 1/2**	-	**Z STA GAIL 12 R 1/2**	-
12	L	3/8" BSP	**Z GAIL 12 R 3/8**	-	**Z STA GAIL 12 R 3/8**	-
15	L	1/2" BSP	**Z GAIL 15 R 1/2**	-	**Z STA GAIL 15 R 1/2**	-
18	L	1/2" BSP	**Z GAIL 18 R 1/2**	-	**Z STA GAIL 18 R 1/2**	-
22	L	3/4" BSP	**Z GAIL 22 R 3/4**	-	**Z STA GAIL 22 R 3/4**	-
28	L	1" BSP	**Z GAIL 28 R 1**	-	**Z STA GAIL 28 R 1**	-
35	L	1"1/4 BSP	**Z GAIL 35 R 1 1/4**	-	**Z STA GAIL 35 R 1 1/4**	-
42	L	1"1/2 BSP	**Z GAIL 42 R 1 1/2**	-	**Z STA GAIL 42 R 1 1/2**	-
6	S	1/4" BSP	**Z GAIS 6 R 1/4**	-	**Z STA GAIS 6 R 1/4**	-
8	S	1/4" BSP	**Z GAIS 8 R 1/4**	-	**Z STA GAIS 8 R 1/4**	-
10	S	3/8" BSP	**Z GAIS 10 R 3/8**	-	**Z STA GAIS 10 R 3/8**	-
12	S	3/8" BSP	**Z GAIS 12 R 3/8**	-	**Z STA GAIS 12 R 3/8**	-
14	S	3/8" BSP	**Z GAIS 14 R 3/8**	-	**Z STA GAIS 14 R 3/8**	-
14	S	1/2" BSP	**Z GAIS 14 R 1/2**	-	**Z STA GAIS 14 R 1/2**	-
16	S	1/2" BSP	**Z GAIS 16 R 1/2**	-	**Z STA GAIS 16 R 1/2**	-
20	S	3/4" BSP	**Z GAIS 20 R 3/4**	-	**Z STA GAIS 20 R 3/4**	-
25	S	1" BSP	**Z GAIS 25 R 1**	-	**Z STA GAIS 25 R 1**	-
30	S	1"1/4 BSP	**Z GAIS 30 R 1 1/4**	-	**Z STA GAIS 30 R 1 1/4**	-
38	S	1"1/2 BSP	**Z GAIS 38 R 1 1/2**	-	**Z STA GAIS 38 R 1 1/2**	-

Racor para manómetro BSP

Gauge coupling BSP cylindrical

Raccord union pour manomètre gaz

Raccordo per manometro BSP

TUBO PIPE	SERIE SERIES	ROSCA THREAD	Referencia Part n°	€
6	L	1/4" BSP	**Z MAVL 6 R 1/4**	-
8	L	1/4" BSP	**Z MAVL 8 R 1/4**	-
10	L	1/4" BSP	**Z MAVL 10 R 1/4**	-
12	L	1/4" BSP	**Z MAVL 12 R 1/4**	-
6	S	1/2" BSP	**Z MAVS 6 R 1/2**	-
8	S	1/2" BSP	**Z MAVS 8 R 1/2**	-
10	S	1/2" BSP	**Z MAVS 10 R 1/2**	-
12	S	1/2" BSP	**Z MAVS 12 R 1/2**	-

Arandela para manómetros

Seal for gauge coupling

Raccord bague pour manomètres

Guarnizione per manometro

ROSCA THREAD	Referencia Part n°	€
1/4" BSP	**Z AM 6**	-
1/2" BSP	**Z AM 12**	-

Racor recto hembra rosca Métrica

Female stud coupling Metric Cylndrical

Raccord union simple femelle Métrique

Raccordo di estremità femmina metrica

TUBO PIPE	SERIE SERIES	ROSCA THREAD	Referencia Part n°	€
6	L	M10X1	**Z GAIL 6 M 10X1**	-
8	L	M12X1.5	**Z GAIL 8 M 12X1.5**	-
10	L	M14X1.5	**Z GAIL 10 M 14X1.5**	-
12	L	M16X1.5	**Z GAIL 12 M 16X1.5**	-
15	L	M18X1.5	**Z GAIL 15 M 18X1.5**	-
18	L	M22X1.5	**Z GAIL 18 M 22X1.5**	-
22	L	M26X1.5	**Z GAIL 22 M 26X1.5**	-
28	L	M33X2	**Z GAIL 28 M 33X2**	-
35	L	M42X2	**Z GAIL 35 M 42X2**	-
42	L	M48X2	**Z GAIL 42 M 48X2**	-
6	S	M12X1.5	**Z GAIS 6 M 12X1.5**	-
8	S	M14X1.5	**Z GAIS 8 M 14X1.5**	-
10	S	M16X1.5	**Z GAIS 10 M 16X1.5**	-
12	S	M18X1.5	**Z GAIS 12 M 18X1.5**	-
14	S	M20X1.5	**Z GAIS 14 M 20X1.5**	-
16	S	M22X1.5	**Z GAIS 16 M 22X1.5**	-
20	S	M27X2	**Z GAIS 20 M 27X2**	-
25	S	M33X2	**Z GAIS 25 M 33X2**	-
30	S	M42X2	**Z GAIS 30 M 42X2**	-
38	S	M48X2	**Z GAIS 38 M 48X2**	-

Racor para manómetro DKOL/DKOS

NEW

Gauge coupling DKOL/DKOS cylindrical

Raccord union pour manomètre DKOL/DKOS

Raccordo per manometro DKOL/DKOS

TUBO PIPE	SERIE SERIES	ROSCA THREAD	Referencia Part n°	€
6	L	1/4" BSP	**Z MAFL 6 R 1/4**	-
8	L	1/4" BSP	**Z MAFL 8 R 1/4**	-
10	L	1/4" BSP	**Z MAFL 10 R 1/4**	-
12	L	1/4" BSP	**Z MAFL 12 R 1/4**	-
6	S	1/2" BSP	**Z MAFS 6 R 1/2**	-
8	S	1/2" BSP	**Z MAFS 8 R 1/2**	-
10	S	1/2" BSP	**Z MAFS 10 R 1/2**	-
12	S	1/2" BSP	**Z MAFS 12 R 1/2**	-

*Consultar / On request / Sur demande / Su richiesta

Racores DIN 2353

DIN 2353 Pipe fittings
Raccords à bague DIN 2353
Raccordi DIN 2353

Racor en codo orientable sin estrangulación rosca BSP

Banjo coupling with captive seal and o'ring BSP cylindrical

Raccord équerre orientable articulée sans étranglement gaz

Raccordo orientabile 90° ad occhio BSP con guarnizione

TUBO PIPE	SERIE SERIES	ROSCA THREAD	Referencia Part n°	€	Referencia STA Part N° STA	€
6	L	1/8" BSP	**Z WSVL 6 R 1/8**	-	**Z STA WSVL 6 R 1/8**	-
6	L	1/4" BSP	**Z WSVL 6 R 1/4**	-	**Z STA WSVL 6 R 1/4**	-
8	L	1/4" BSP	**Z WSVL 8 R 1/4**	-	**Z STA WSVL 8 R 1/4**	-
10	L	1/4" BSP	**Z WSVL 10 R 1/4**	-	**Z STA WSVL 10 R 1/4**	-
12	L	3/8" BSP	**Z WSVL 12 R 3/8**	-	**Z STA WSVL 12 R 3/8**	-
15	L	1/2" BSP	**Z WSVL 15 R 1/2**	-	**Z STA WSVL 15 R 1/2**	-
18	L	1/2" BSP	**Z WSVL 18 R 1/2**	-	**Z STA WSVL 18 R 1/2**	-
22	L	3/4" BSP	**Z WSVL 22 R 3/4**	-	**Z STA WSVL 22 R 3/4**	-
28	L	1" BSP	**Z WSVL 28 R 1**	-	**Z STA WSVL 28 R 1**	-
35	L	1"1/4 BSP	**Z WSVL 35 R 1 1/4**	-	**Z STA WSVL 35 R 1 1/4**	-
42	L	1"1/2 BSP	**Z WSVL 42 R 1 1/2**	-	**Z STA WSVL 42 R 1 1/2**	-
6	S	1/4" BSP	**Z WSVS 6 R 1/4**	-	**Z STA WSVS 6 R 1/4**	-
8	S	1/4" BSP	**Z WSVS 8 R 1/4**	-	**Z STA WSVS 8 R 1/4**	-
10	S	3/8" BSP	**Z WSVS 10 R 3/8**	-	**Z STA WSVS 10 R 3/8**	-
12	S	3/8" BSP	**Z WSVS 12 R 3/8**	-	**Z STA WSVS 12 R 3/8**	-
14	S	1/2" BSP	**Z WSVS 14 R 1/2**	-	**Z STA WSVS 14 R 1/2**	-
16	S	1/2" BSP	**Z WSVS 16 R 1/2**	-	**Z STA WSVS 16 R 1/2**	-
20	S	3/4" BSP	**Z WSVS 20 R 3/4**	-	**Z STA WSVS 20 R 3/4**	-
25	S	1" BSP	**Z WSVS 25 R 1**	-	**Z STA WSVS 25 R 1**	-
30	S	1"1/4 BSP	**Z WSVS 30 R 1 1/4**	-	**Z STA WSVS 30 R 1 1/4**	-
38	S	1"1/2 BSP	**Z WSVS 38 R 1 1/2**	-	**Z STA WSVS 38 R 1 1/2**	-

Racor en codo orientable sin estrangulación rosca Métrica

Banjo coupling with captive seal and o'ring Metric cylindrical

Raccord équerre orientable articulée sans étranglement Métrique

Raccordo orientabile 90° ad occhio Metrico con guarnizione

TUBO PIPE	SERIE SERIES	ROSCA THREAD	Referencia Part n°	€	Referencia STA Part N° STA	€
6	L	M10X1	**Z WSVL 6 M 10X1**	-	**Z STA WSVL 6 M 10X1**	-
8	L	M12X1.5	**Z WSVL 8 M 12X1,5**	-	**Z STA WSVL 8 M 12X1,5**	-
10	L	M14X1.5	**Z WSVL 10 M 14X1,5**	-	**Z STA WSVL 10 M 14X1,5**	-
12	L	M16X1.5	**Z WSVL 12 M 16X1,5**	-	**Z STA WSVL 12 M 16X1,5**	-
15	L	M18X1.5	**Z WSVL 15 M 18X1,5**	-	**Z STA WSVL 15 M 18X1,5**	-
18	L	M22X1.5	**Z WSVL 18 M 22X1,5**	-	**Z STA WSVL 18 M 22X1,5**	-
22	L	M26X1.5	**Z WSVL 22 M 26X1,5**	-	**Z STA WSVL 22 M 26X1,5**	-
28	L	M33X2	**Z WSVL 28 M 33X2**	-	**Z STA WSVL 28 M 33X2**	-
35	L	M42X2	**Z WSVL 35 M 42X2**	-	**Z STA WSVL 35 M 42X2**	-
42	L	M48X2	**Z WSVL 42 M 48X2**	-	**Z STA WSVL 42 M 48X2**	-
6	S	M12X1.5	**Z WSVS 6 M 12X1,5**	-	**Z STA WSVS 6 M 12X1,5**	-
8	S	M14X1.5	**Z WSVS 8 M 14X1,5**	-	**Z STA WSVS 8 M 14X1,5**	-
10	S	M16X1.5	**Z WSVS 10 M 16X1,5**	-	**Z STA WSVS 10 M 16X1,5**	-
12	S	M18X1.5	**Z WSVS 12 M 18X1,5**	-	**Z STA WSVS 12 M 18X1,5**	-
14	S	M20X1.5	**Z WSVS 14 M 20X1,5**	-	**Z STA WSVS 14 M 20X1,5**	-
16	S	M22X1.5	**Z WSVS 16 M 22X1,5**	-	**Z STA WSVS 16 M 22X1,5**	-
20	S	M27X2	**Z WSVS 20 M 27X2**	-	**Z STA WSVS 20 M 27X2**	-
30	S	M42X2	**Z WSVS 30 M 42X2**	-	**Z STA WSVS 30 M 42X2**	-
38	S	M48x2	**Z WSVS 38 M 48X2**	-	**Z STA WSVS 38 M 48X2**	-

***Consultar** / On request**/ Sur demande** / Su richiesta

Racores DIN 2353

DIN 2353 Pipe fittings
Raccords à bague DIN 2353
Raccordi DIN 2353

Tapón de cierre para tubo con junta tórica

Blanking plug with o'ring

Raccord bouchon de fermeture avec o'ring

Tappo di chiusura con o'ring

TUBO PIPE	SERIE SERIES	Referencia Part n°	€
6	L/S	**Z BUTZEN L 6**	-
8	L/S	**Z BUTZEN L 8**	-
10	L/S	**Z BUTZEN L 10**	-
12	L/S	**Z BUTZEN L 12**	-
15	L	**Z BUTZEN L 15**	-
18	L	**Z BUTZEN L 18**	-
22	L	**Z BUTZEN L 22**	-
28	L	**Z BUTZEN L 28**	-
35	L	**Z BUTZEN L 35**	-
42	L	**Z BUTZEN L 42**	-
14	S	**Z BUTZEN S 14**	-
16	S	**Z BUTZEN S 16**	-
20	S	**Z BUTZEN S 20**	-
25	S	**Z BUTZEN S 25**	-
30	S	**Z BUTZEN S 30**	-
38	S	**Z BUTZEN S 38**	-

Tapón de cierre Allen rosca BSP con junta

Blanking plug with captive seal BSP cylindrical

Raccord bouchon Allen gaz avec joint plat

Tappo cilindrico BSP esagono incassato con guarnizione

ROSCA THREAD	Referencia Part n°	€
1/8" BSP	**Z STOPFEN 1/8**	-
1/4" BSP	**Z STOPFEN 1/4**	-
3/8" BSP	**Z STOPFEN 3/8**	-
1/2" BSP	**Z STOPFEN 1/2**	-
3/4" BSP	**Z STOPFEN 3/4**	-
1" BSP	**Z STOPFEN 1**	-
1"1/4 BSP	**Z STOPFEN 1 1/4**	-
1"1/2 BSP	**Z STOPFEN 1 1/2**	-

Tapón de cierre Allen rosca Métrica con junta

Blanking plug with captive seal Metric cylindrical

Raccord bouchon Allen Métrique avec joint plat

Tappo cilindrico Metrico esagono incassato con guarnizione

ROSCA THREAD	Referencia Part n°	€
M10X1	**Z STOPFEN M 10X1**	-
M12X1.5	**Z STOPFEN M 12X1,5**	-
M14X1.5	**Z STOPFEN M 14X1,5**	-
M16X1.5	**Z STOPFEN M 16X1,5**	-
M18X1.5	**Z STOPFEN M 18X1,5**	-
M20X1.5	**Z STOPFEN M 20X1,5**	-
M22X1.5	**Z STOPFEN M 22X1,5**	-
M26X1.5	**Z STOPFEN M 26X1,5**	-
M27X2	**Z STOPFEN M 27X2**	-
M33X2	**Z STOPFEN M 33X2**	-
M42X2	**Z STOPFEN M 42X2**	-
M48X2	**Z STOPFEN M 48X2**	-

Juntas tóricas FKM verde

Green FKM o-ring

Joint torique en FKM vert

O´ring FKM verde

TUBO PIPE	Referencia Part n°	€
6	**JVT06**	-
8	**JVT08**	-
10	**JVT10**	-
12	**JVT12**	-
14	**JVT14**	-
15-16	**JVT15**	-
18	**JVT18**	-
20	**JVT20**	-
22	**JVT22**	-
25	**JVT25**	-
28	**JVT28**	-
30	**JVT30**	-
35	**JVT35**	-
38	**JVT38**	-
42	**JVT42**	-

Juntas planas FKM verde

Green FKM captive seal

Joint plat en FKM vert

Guarnizione piana FKM verde

ROSCA THREAD	Referencia Part n°	€
1/8" BSP - M10x1	**JVBSP02**	-
M12x1.5	**JVM12**	-
1/4" BSP - M14x1.5	**JVBSP04**	-
M16x1.5	**JVM16**	-
3/8" BSP	**JVBSP06**	-
M18x1.5	**JVM18**	-
M20x1.5	**JVM20**	-
1/2" BSP	**JVBSP08**	-
M22x1.5	**JVM22**	-
3/4" BSP - M26x1.5	**JVBSP12**	-
1" BSP - M33x2	**JVBSP16**	-
1"1/4 BSP - M42x2	**JVBSP20**	-
1"1/2 BSP - M48x2	**JVBSP24**	-
2" BSP	**JVBSP32**	-

Racores DIN 2353

DIN 2353 Pipe fittings
Raccords à bague DIN 2353
Raccordi DIN 2353

Vomo

Tool for manual pre-assembly

Outil pour pre-montage

Utensili di premontaggio

TUBO PIPE	SERIE SERIES	ROSCA THREAD	Referencia Part n°	€
6	L	12x1.5	**Z VOMO L 6**	-
8	L	14x1.5	**Z VOMO L 8**	-
10	L	16x1.5	**Z VOMO L 10**	-
12	L	18x1.5	**Z VOMO L 12**	-
15	L	22x1.5	**Z VOMO L 15**	-
18	L	26x1.5	**Z VOMO L 18**	-
22	L	30x2.0	**Z VOMO L 22**	-
28	L	36x2.0	**Z VOMO L 28**	-
35	L	45x2.0	**Z VOMO L 35**	-
42	L	52x2.0	**Z VOMO L 42**	-
6	S	14x1.5	**Z VOMO S 6**	-
8	S	16x1.5	**Z VOMO S 8**	-
10	S	18x1.5	**Z VOMO S 10**	-
12	S	20x1.5	**Z VOMO S 12**	-
14	S	22x1.5	**Z VOMO S 14**	-
16	S	24x1.5	**Z VOMO S 16**	-
20	S	30x2.0	**Z VOMO S 20**	-
25	S	36x2.0	**Z VOMO S 25**	-
30	S	42x2.0	**Z VOMO S 30**	-

Material Acero Templado / *Made of Hardened tool-steel* / Matériel Acier Trempé / *Materiale acciaio temprato*

Grasa

Grease

Graisse

Lubrificante

PESO (gr) WEIGHT (gr)	Referencia Part n°	€
145	**GR ASW120**	-

***Consultar** / On request**/ Sur demande** / Su richiesta

Racores DIN 2353

DIN 2353 Pipe fittings
Raccords à bague DIN 2353
Raccordi DIN 2353

Válvula antirretorno rosca BSP-tubo

Non-return valve flow from male stud end BSP cylindrical

Clapet anti-rétour unidirectionnel à gauche mâle-tube

Valvola di ritegno a sinistra con guarnizione piana

TUBO PIPE	SERIE SERIES	ROSCA THREAD	Referencia Part n°	€
6	L	1/8" BSP	**Z RHVL 6 R 1/8**	-
8	L	1/4" BSP	**Z RHVL 8 R 1/4**	-
10	L	1/4" BSP	**Z RHVL 10 R 1/4**	-
12	L	3/8" BSP	**Z RHVL 12 R 3/8**	-
15	L	1/2" BSP	**Z RHVL 15 R 1/2**	-
18	L	1/2" BSP	**Z RHVL 18 R 1/2**	-
22	L	3/4" BSP	**Z RHVL 22 R 3/4**	-
28	L	1" BSP	**Z RHVL 28 R 1**	-
35	L	1"1/4 BSP	**Z RHVL 35 R 1 1/4**	-
42	L	1"1/2 BSP	**Z RHVL 42 R 1 1/2**	-
6	S	1/4" BSP	**Z RHVS 6 R 1/4**	-
8	S	1/4" BSP	**Z RHVS 8 R 1/4**	-
10	S	3//8" BSP	**Z RHVS 10 R 3/8**	-
12	S	3/8" BSP	**Z RHVS 12 R 3/8**	-
14	S	1/2" BSP	**Z RHVS 14 R 1/2**	-
16	S	1/2" BSP	**Z RHVS 16 R 1/2**	-
20	S	3/4" BSP	**Z RHVS 20 R 3/4**	-
25	S	1" BSP	**Z RHVS 25 R 1**	-
30	S	1"1/4 BSP	**Z RHVS 30 R 1 1/4**	-
38	S	1"1/2 BSP	**Z RHVS 38 R 1 1/2**	-

Taraje 1 bar. Para otras presiones de tarado estandard, consultar. */ Setting 1 bar. For other standard spring pressures, consult us.* / Tarage 1 bar. Pour d'autres pressions ressort standard, consultez-nous. */ Per altre pressioni di taratura standard, consultare.*

Válvula antirretorno tubo-rosca BSP

Non-return valve flow towards male stud end BSP cylidrical

Clapet anti-rétour unidirectionnel à droite tube-mâle

Valvola di ritegno a destra con guarnizione piana

TUBO PIPE	SERIE SERIES	ROSCA THREAD	Referencia Part n°	€
6	L	1/8" BSP	**Z RHZL 6 R 1/8**	-
8	L	1/4" BSP	**Z RHZL 8 R 1/4**	-
10	L	1/4" BSP	**Z RHZL 10 R 1/4**	-
12	L	3/8" BSP	**Z RHZL 12 R 3/8**	-
15	L	1/2" BSP	**Z RHZL 15 R 1/2**	-
18	L	1/2" BSP	**Z RHZL 18 R 1/2**	-
22	L	3/4" BSP	**Z RHZL 22 R 3/4**	-
28	L	1" BSP	**Z RHZL 28 R 1**	-
35	L	1"1/4 BSP	**Z RHZL 35 R 1 1/4**	-
42	L	1"1/2 BSP	**Z RHZL 42 R 1 1/2**	-
6	S	1/4" BSP	**Z RHZS 6 R 1/4**	-
8	S	1/4" BSP	**Z RHZS 8 R 1/4**	-
10	S	3/8" BSP	**Z RHZS 10 R 3/8**	-
12	S	3/8" BSP	**Z RHZS 12 R 3/8**	-
14	S	1/2" BSP	**Z RHZS 14 R 1/2**	-
16	S	1/2" BSP	**Z RHZS 16 R 1/2**	-
20	S	3/4" BSP	**Z RHZS 20 R 3/4**	-
25	S	1" BSP	**Z RHZS 25 R 1**	-
30	S	1"1/4 BSP	**Z RHZS 30 R 1 1/4**	-
38	S	1"1/2 BSP	**Z RHZS 38 R 1 1/2**	-

Taraje 1 bar. Para otras presiones de tarado estandard, consultar. */ Setting 1 bar. For other standard spring pressures, consult us.* / Tarage 1 bar. Pour d'autres pressions ressort standard, consultez-nous. */ Per altre pressioni di taratura standard, consultare.*

Válvula antirretorno tubo-tubo

Non-return valve tube-tube

Clapet anti-rétour bidirectionnel tube-tube

Valvola di ritegno tubo-tubo

TUBO PIPE	SERIE SERIES	Referencia Part n°	€	Referencia STA Part N° STA	€
6	L	**Z RHDL 6**	-	**Z STA RHDL 6**	-
8	L	**Z RHDL 8**	-	**Z STA RHDL 8**	-
10	L	**Z RHDL 10**	-	**Z STA RHDL 10**	-
12	L	**Z RHDL 12**	-	**Z STA RHDL 12**	-
15	L	**Z RHDL 15**	-	**Z STA RHDL 15**	-
18	L	**Z RHDL 18**	-	**Z STA RHDL 18**	-
22	L	**Z RHDL 22**	-	**Z STA RHDL 22**	-
28	L	**Z RHDL 28**	-	**Z STA RHDL 28**	-
35	L	**Z RHDL 35**	-	**Z STA RHDL 35**	-
42	L	**Z RHDL 42**	-	**Z STA RHDL 42**	-
6	S	**Z RHDS 6**	-	**Z STA RHDS 6**	-
8	S	**Z RHDS 8**	-	**Z STA RHDS 8**	-
10	S	**Z RHDS 10**	-	**Z STA RHDS 10**	-
12	S	**Z RHDS 12**	-	**Z STA RHDS 12**	-
14	S	**Z RHDS 14**	-	**Z STA RHDS 14**	-
16	S	**Z RHDS 16**	-	**Z STA RHDS 16**	-
20	S	**Z RHDS 20**	-	**Z STA RHDS 20**	-
25	S	**Z RHDS 25**	-	**Z STA RHDS 25**	-
30	S	**Z RHDS 30**	-	**Z STA RHDS 30**	-
38	S	**Z RHDS 38**	-	**Z STA RHDS 38**	-

Taraje 1 bar. Para otras presiones de tarado estandard, consultar. */ Setting 1 bar. For other standard spring pressures, consult us.* / Tarage 1 bar. Pour d'autres pressions ressort standard, consultez-nous. */ Per altre pressioni di taratura standard, consultare.*

Incorporamos válvulas antirretorno sin tuerca ni anillo

Non-Return valve only body

***Consultar** / On request / **Sur demande** / Su richiesta

Racores JIC 37°

Flare fittings JIC 37°
Adapteurs JIC 37°
Raccordi JIC 37°

Tuercas JIC 37°

Nut JIC 37°

Écrou JIC 37°

Dado JIC

TUBO PIPE		ROSCA THREAD	Referencia Part n°	€
6	1/4"	7/16" 20h UNF	**ZS11006**	-
8	5/16"	1/2" 20h UNF	**ZS11008**	-
10	3/8"	9/16" 18h UNF	**ZS11010**	-
12	1/2"	3/4" 16h UNF	**ZS11012**	-
14-15-16	5/8"	7/8" 14h UNF	**ZS11016**	-
18-20	-	1"1/16 12h UN	**ZS11020**	-
-	3/4"	1"1/16 12h UNF	**ZS11020W**	-
25	1"	1"5/16 12h UN	**ZS11025**	-
30-32	1 1/4"	1"5/8 12h UN	**ZS11032**	-
38	1 1/2"	1"7/8 12h UN	**ZS11038**	-

Ferulas JIC 37° (tubo Métrico)

Metric tube slevees JIC 37°

Ferrules JIC 37° pour tube Métrique

Bussola JIC 37° per tubo Metrico

TUBO PIPE	Referencia Part n°	€
6	**ZS12006**	-
8	**ZS12008**	-
10	**ZS12010**	-
12	**ZS12012**	-
14	**ZS12014**	-
15	**ZS12015**	-
16	**ZS12016**	-
18	**ZS12018**	-
20	**ZS12020**	-
25	**ZS12025**	-
30	**ZS12030**	-
32	**ZS12032**	-
38	**ZS12038**	-

Ferulas JIC 37° (tubo Gas)

Tube sleeves Gas JIC 37°

Ferrules JIC 37° pour tube Gaz

Bussola JIC 37° per tubo gas

TUBO PIPE	Referencia Part n°	€
1/4"	**ZS12104**	-
5/16"	**ZS12105**	-
3/8"	**ZS12106**	-
1/2"	**ZS12108**	-
5/8"	**ZS12110**	-
3/4"	**ZS12112**	-
1"	**ZS12116**	-
1"1/4	**ZS12120**	-
1"1/2	**ZS12124**	-

Tapón macho JIC 37°

Plug male JIC 37°

Bouchon mâle JIC 37°

Tappo maschio JIC 37°

TUBO PIPE		ROSCA THREAD	Referencia Part n°	€
6	1/4"	7/16" 20h UNF	**ZS14006**	-
8	5/16"	1/2" 20h UNF	**ZS14008**	-
10	3/8"	9/16" 18h UNF	**ZS14010**	-
12	1/2"	3/4" 16h UNF	**ZS14012**	-
14-15-16	5/8"	7/8" 14h UNF	**ZS14016**	-
18-20	3/4"	1"1/16 12h UN	**ZS14020**	-
25	1"	1"5/16 12h UN	**ZS14025**	-
30-32	1 1/4"	1"5/8 12h UN	**ZS14032**	-
38	1 1/2"	1"7/8 12h UN	**ZS14038**	-

Tapón hembra giratoria JIC 37°

Cap JIC 37°

Bouchon femelle JIC 37°

Tappo femmina girevole JIC 37°

TUBO PIPE		ROSCA THREAD	Referencia Part n°	€
6	1/4"	7/16"-20h UNF	**ZS13006**	-
8	5/16"	1/2"-20h UNF	**ZS13008**	-
10	3/8"	9/16"-18h UNF	**ZS13010**	-
12	1/2"	3/4"-16h UNF	**ZS13012**	-
14-15-16	5/8"	7/8"-14h UNF	**ZS13016**	-
18-20	3/4"	1"1/16-12h UN	**ZS13020**	-
25	1"	1"5/16-12h UN	**ZS13025**	-
30-32	1 1/4"	1"5/8-12h UN	**ZS13032**	-
38	1 1/2"	1"7/8-12h UN	**ZS13038**	-

Racores JIC 37°

Flare fittings JIC 37°
Adapteurs JIC 37°
Raccordi JIC 37°

Racor macho-macho JIC 37°

Straight union JIC 37°

Adapteur droit mâle JIC 37°

Nipples maschio-maschio JIC 37°

TUBO PIPE		ROSCA THREAD	Referencia Part n°	€
6	1/4"	7/16" 20h UNF	**ZS26006**	-
8	5/16"	1/2" 20h UNF	**ZS26008**	-
10	3/8"	9/16" 18h UNF	**ZS26010**	-
12	1/2"	3/4" 16h UNF	**ZS26012**	-
14-15-16	5/8"	7/8" 14h UNF	**ZS26016**	-
18-20	3/4"	1"1/16 12h UN	**ZS26020**	-
25	1"	1"5/16 12h UN	**ZS26025**	-
30-32	1" 1/4	1"5/8 12h UN	**ZS26032**	-
38	1" 1/2	1"7/8 12h UN	**ZS26038**	-
50	2"	2" 1/2 12h UN	**ZS26050**	-

Racor reducción macho-macho JIC 37°

Reducer adaptor male JIC 37°

Adapteur réduction mâle JIC 37°

Nipples di riduzione maschio-maschio JIC 37°

TUBO PIPE		ROSCA THREAD		Referencia Part n°	€
8 5/16"	6 1/4"	1/2" 20h UNF	7/16" 20h UNF	**ZS2600806**	-
10 5/16"	6 1/4"	9/16" 18h UNF	7/16" 20h UNF	**ZS2601006**	-
10 3/8"	8 5/16"	9/16" 18h UNF	1/2" 20h UNF	**ZS2601008**	-
12 1/2"	6 1/4"	3/4" 16h UNF	7/16" 20h UNF NEW	**ZS2601206**	-
12 1/2"	10 3/8"	3/4" 16h UNF	9/16" 18h UNF	**ZS2601210**	-
14-15-16 5/8"	12 1/2"	7/8" 14h UNF	3/4" 16h UNF	**ZS2601612**	-
18-20 3/4"	14-15-16 5/8"	1"1/16 12h UN	7/8" 14h UNF	**ZS2602016**	-
25 1"	18-20 3/4"	1"5/16 12h UN	1"1/16 12h UN	**ZS2602520**	-
30-32 1"1/4	25 1"	1"5/8 12h UN	1"5/16 12h UN	**ZS2603225**	-
38 1"1/2	30-32 1"1/4	1"7/8 12h UN	1"5/8 12h UN	**ZS2603832**	-

Racor pasatabiques JIC 37°

Straight bulkhead fitting JIC 37°

Union passe cloison droite mâle JIC 37° équipé

Nipples passaparete JIC 37°

TUBO PIPE		ROSCA THREAD	Referencia Part n°	€
6	1/4"	7/16" 20h UNF	**ZS25006**	-
8	5/16"	1/2" 20h UNF	**ZS25008**	-
10	3/8"	9/16" 18h UNF	**ZS25010**	-
12	1/2"	3/4" 16h UNF	**ZS25012**	-
14-15-16	5/8"	7/8" 14h UNF	**ZS25016**	-
18-20	3/4"	1"1/16 12h UN	**ZS25020**	-
25	1"	1"5/16 12h UN	**ZS25025**	-
30-32	1" 1/4	1"5/8 12h UN	**ZS25032**	-
38	1" 1/2	1"7/8 12h UN	**ZS25038**	-

Racor macho-macho JIC 37° con junta

Straight union JIC 37° with o'ring

Adapteur droit mâle JIC 37° avec o'ring

Nipples maschio-maschio JIC 37° con O´ring

TUBO PIPE		ROSCA THREAD	Referencia Part n°	€
6	1/4"	7/16" 20h UNF	**ZS26006OR**	-
8	5/16"	1/2" 20h UNF	**ZS26008OR**	-
10	3/8"	9/16" 18h UNF	**ZS26010OR**	-
12	1/2"	3/4" 16h UNF	**ZS26012OR**	-
14-15-16	5/8"	7/8" 14h UNF	**ZS26016OR**	-
18-20	3/4"	1"1/16 12h UN	**ZS26020OR**	-
25	1"	1"5/16 12h UN	**ZS26025OR**	-
30-32	1" 1/4	1"5/8 12h UN	**ZS26032OR**	-
38	1" 1/2	1"7/8 12h UN	**ZS26038OR**	-

Racor macho JIC 37° - macho Métrico

Metric adaptor male - male JIC 37°

Adapteur mâle JIC 37° - mâle Métrique

Nipples maschio JIC 37° - maschio metrico con O´ring

TUBO PIPE		ROSCA THREAD		Referencia Part n°	€
6	1/4"	M10x1	7/16" 20h UNF	**ZS2400610**	-
8	5/16"	M10x1	1/2" 20h UNF	**ZS2400810***	-
8	5/16"	M12x1.5	1/2" 20h UNF	**ZS2400812**	-
8	5/16"	M14x1.5	1/2" 20h UNF	**ZS2400814***	-
10	3/8"	M12x1.5	9/16" 18h UNF	**ZS2401012**	-
10	3/8"	M14x1.5	9/16" 18h UNF	**ZS2401014**	-
10	3/8"	M16x1.5	9/16" 18h UNF	**ZS2401016**	-
12	1/2"	M14x1.5	3/4" 16h UNF	**ZS2401214**	-
12	1/2"	M16x1.5	3/4" 16h UNF	**ZS2401216**	-
12	1/2"	M18x1.5	3/4" 16h UNF	**ZS2401218**	-
14-15-16	5/8"	M18x1.5	7/8" 14h UNF	**ZS2401418**	-
14-15-16	5/8"	M27x2	7/8" 14h UNF	**ZS2401427***	-
14-15-16	5/8"	M22x1.5	7/8" 14h UNF	**ZS2401622**	-
18-20	3/4"	M22x1.5	1"1/16 12h UN	**ZS2402022**	-
18-20	3/4"	M27X2	1"1/16 12h UN	**ZS2402027**	-
25	1"	M27x2	1"5/16 12h UNF	**ZS2402527***	-
25	1"	M33x2	1"5/16 12h UN	**ZS2402533**	-
30-32	1" 1/4	M42x2	1"5/8 12h UN	**ZS2403242**	-
38	1" 1/2	M50x2	1"7/8 12h UN	**ZS2403850**	-

* **Hasta fin de existencias** / *Until end of stock* / Jusqu´à la fin du stock / *Fino ad esaurimento*

Racores JIC 37°

Flare fittings JIC 37°
Adapteurs JIC 37°
Raccordi JIC 37°

Racor macho JIC 37° - macho NPT

Straight adaptor male JIC 37° - male NPT pipe

Adapteur mâle JIC 37° - mâle NPT (BRIGGS)

Nipples maschio JIC 37° - maschio conico NPT

TUBO PIPE		ROSCA THREAD		Referencia Part n°	€
6	1/4"	7/16" 20h UNF	1/8" NPT	**ZS2000610**	-
6	1/4"	7/16" 20h UNF	1/4" NPT	**ZS2000613**	-
6	1/4	7/16" 20h UNF	3/8" NPT	**ZS2000617**	-
8	5/16"	1/2" 20h UNF	1/8" NPT	**ZS2000810**	-
8	5/16"	1/2" 20h UNF	1/4" NPT	**ZS2000813**	-
8	5/16"	1/2" 20h UNF	3/8" NPT	**ZS2000817**	-
10	3/8"	9/16" 18h UNF	1/8" NPT	**ZS2001010**	-
10	3/8"	9/16" 18h UNF	1/4" NPT	**ZS2001013**	-
10	3/8"	9/16" 18h UNF	3/8" NPT	**ZS2001017**	-
10	3/8"	9/16" 18h UNF	1/2" NPT	**ZS2001021**	-
12	1/2"	3/4" 16h UNF	1/4" NPT	**ZS2001213**	-
12	1/2"	3/4" 16h UNF	3/8" NPT	**ZS2001217**	-
12	1/2"	3/4" 16h UNF	1/2" NPT	**ZS2001221**	-
12	1/2"	3/4" 16h UNF	3/4" NPT	**ZS2001226**	-
14-15-16	5/8"	7/8" 14h UNF	1/2" NPT	**ZS2001621**	-
14-15-16	5/8"	7/8" 14h UNF	3/4" NPT	**ZS2001626**	-
18-20	3/4"	1"1/16 12h UN	1/4" NPT	**ZS2002013**	-
18-20	3/4"	1"1/16 12h UN	1/2" NPT	**ZS2002021**	-
18-20	3/4"	1"1/16 12h UN	3/4" NPT	**ZS2002026**	-
18-20	3/4"	1"1/16 12h UN	1" NPT	**ZS2002033**	-
25	1"	1"5/16 12h UN	3/4" NPT	**ZS2002526**	-
25	1"	1"5/16 12h UN	1" NPT	**ZS2002533**	-
30-32	1"	1"5/16 12h UN	1" 1/4 NPT	**ZS2002542**	-
30-32	1" 1/4	1"5/8 12h UN	1" NPT	**ZS2003233**	-
30-32	1" 1/4	1"5/8 12h UN	1 1/4" NPT	**ZS2003242**	-
38	1" 1/2	1"7/8 12h UN	1" NPT	**ZS2003833**	-
38	1" 1/2	1"7/8 12h UN	1 1/4" NPT	**ZS2003842**	-
38	1" 1/2	1"7/8 12h UN	1 1/2" NPT	**ZS2003848**	-
50	2"	2" 1/2 12h UN	2" NPT	**ZS2005060**	-

Hembra giratoria JIC 37° - macho UNF

Straight adaptor swivel female JIC 37° - male UNF

Adapteur femelle tournante JIC 37° - mâle UNF

Niples femmina girevole JIC 37° - maschio UNF

TUBO PIPE		ROSCA (H) THREAD (F)	ROSCA (M) THREAD (M)	Referencia Part n°	€
6	1/4"	7/16" 20h UNF	7/16" 20h UNF	**ZS38006**	*
10	3/8"	9/16" 18h UNF	9/16" 18h UNF	**ZS38010**	*
12	1/2"	3/4" 16h UNF	3/4" 16h UNF	**ZS38012**	*
14-15-16	5/8"	7/8" 14h UNF	7/8" 14h UNF	**ZS38016**	*
18-20	3/4"	1"1/16 12hUN	1"1/16 12h UN	**ZS38020**	*
25	1"	1"5/16 12h UN	1"5/16 12h UN	**ZS38025**	*

***Ver precios en p.185 (ADAPTADORES O´RING BOSS)** */ *See prices in p.185 (O´RING BOSS ADAPTORS)* / *Prix à la p.185 (ADAPTEURS O´RING BOSS) */ *Vedere prezzi p.185 (ADATTATORI O´RING BOSS)*

Racor macho JIC 37° - macho BSP

Straight adaptor male JIC 37° - male BSP

Adapteur mâle JIC 37° - mâle BSP équipé

Nipples maschio JIC 37° - maschio BSP con rondella e O´ring

TUBO PIPE	ROSCA THREAD	TUBO PIPE	ROSCA THREAD	Referencia Part n°	€
6	1/8" BSP	1/4"	7/16" 20h UNF	**ZS2300610**	-
6	1/4" BSP	1/4"	7/16" 20h UNF	**ZS2300613**	-
6	3/8" BSP	1/4"	7/16" 20h UNF	**ZS2300617**	-
6	1/2" BSP	1/4"	7/16" 20h UNF	**ZS2300621**	-
8	1/4" BSP	5/16"	1/2" 20h UNF	**ZS2300813**	-
8	3/8" BSP	5/16"	1/2" 20h UNF	**ZS2300817**	-
10	1/4" BSP	3/8"	9/16" 18h UNF	**ZS2301013**	-
10	3/8" BSP	3/8"	9/16" 18h UNF	**ZS2301017**	-
10	1/2" BSP	3/8"	9/16" 18h UNF	**ZS2301021**	-
12	1/4" BSP	1/2"	3/4" 16h UNF	**ZS2301213**	-
12	3/8" BSP	1/2"	3/4" 16h UNF	**ZS2301217**	-
12	1/2" BSP	1/2"	3/4" 16h UNF	**ZS2301221**	-
12	3/4" BSP	1/2"	3/4" 16h UNF	**ZS2301226**	-
14-15-16	3/8" BSP	5/8"	7/8" 14h UNF	**ZS2301617**	-
14-15-16	1/2" BSP	5/8"	7/8" 14h UNF	**ZS2301621**	-
14-15-16	3/4" BSP	5/8"	7/8" 14h UNF	**ZS2301626**	-
18-20	1/2" BSP	3/4"	1"1/16 12h UN	**ZS2302021**	-
18-20	3/4" BSP	3/4"	1"1/16 12h UN	**ZS2302026**	-
18-20	1" BSP	3/4"	1"1/16 12h UN	**ZS2302033**	-
25	1/2" BSP	1"	1"5/16 12h UN	**ZS2302521***	-
25	3/4" BSP	1"	1"5/16 12h UN	**ZS2302526**	-
25	1" BSP	1"	1"5/16 12h UN	**ZS2302533**	-
25	1"1/4 BSP	1"	1"5/16 12h UN	**ZS2302542**	-
30-32	1"BSP	1"	1"5/8 12h UN	**ZS2303233**	-
30-32	1"1/4 BSP	1 1/4"	1"5/8 12h UN	**ZS2303242**	-
38	1"1/4 BSP	1 1/2"	1"7/8 12h UN	**ZS2303842**	-
38	1"1/2 BSP	1 1/2"	1"7/8 12h UN	**ZS2303848**	-
38	2" BSP	1 1/2"	1"7/8 12h UN	**ZS2303860**	-
40	1/2" BSP	2"	2"1/2 12h UN NEW	**ZS2305021**	**173,74**

*** Hasta fin de existencias** */ Until end of stock* / Jusqu´à la fin du stock */ Fino ad esaurimento*

Racor macho BSP - hembra giratoria JIC 37°

Straight adaptor male BSP - swivel female JIC 37°

Adapteur mâle BSP - femelle tournante JIC 37°

Adattatore maschio BSP con rondella e O´ring - femmina girevole JIC 37°

TUBO PIPE		ROSCA THREAD		Referencia Part n°	€
6	1/4"	1/8" BSP	7/16" 20h UNF	**ZS1800610**	-
8	5/16"	1/4" BSP	1/2" 20h UNF	**ZS1800813**	-
10	3/8"	1/4" BSP	9/16" 18h UNF	**ZS1801013**	-
10	3/8"	3/8" BSP	9/16" 18h UNF	**ZS1801017**	-
10	3/8"	1/2" BSP	9/16" 18h UNF	**ZS1801021**	-
12	1/2"	3/8" BSP	3/4" 16h UNF	**ZS1801217**	-
14-15-16	5/8"	1/2" BSP	H 3/4" 16h UNF	**ZS1801221**	-
14-15-16	5/8"	1/2" BSP	7/8" 14h UNF	**ZS1801621**	-
18-20	3/4"	3/4" BSP	1" 1/16 12h UNF	**ZS1802026**	-
25	1"	1" BSP	1" 5/16 12h UNF	**ZS1802533**	-
30-32	1" 1/4	1" 1/4 BSP	1" 5/8 12h UNF	**ZS1803242**	-
38	1" 1/2	1" 1/2 BSP	1" 7/8 12h UNF	**ZS1803848**	-

Racores JIC 37°

Flare fittings JIC 37°
Adapteurs JIC 37°
Raccordi JIC 37°

Racor macho JIC 37° - macho BSPT

Straight adaptor male JIC 37° - male BSPT

Adapteur mâle JIC 37° - mâle BSPT

Nipples maschio JIC 37° - maschio conico BSPT

TUBO PIPE		ROSCA THREAD		Referencia Part n°	€
6	1/4"	7/16" 20h UNF	1/8" BSPT	**ZS2100610**	-
6	1/4"	7/16" 20h UNF	1/4" BSPT	**ZS2100613**	-
8	5/16"	1/2" 20h UNF	1/8" BSPT	**ZS2100810**	-
8	5/16"	1/2" 20h UNF	1/4" BSPT	**ZS2100813**	-
8	5/16"	1/2" 20h UNF	3/8" BSPT	**ZS2100817**	-
10	3/8"	9/16" 18h UNF	1/4" BSPT	**ZS2101013**	-
10	3/8"	9/16" 18h UNF	3/8" BSPT	**ZS2101017**	-
10	3/8"	9/16" 18h UNF	1/2" BSPT	**ZS2101021**	-
12	1/2"	3/4" 16h UNF	1/4" BSPT	**ZS2101213**	-
12	1/2"	3/4" 16h UNF	3/8" BSPT	**ZS2101217**	-
12	1/2"	3/4" 16h UNF	1/2" BSPT	**ZS2101221**	-
12	1/2"	3/4" 12h UNF	3/4" BSPT	**ZS2101226**	-
14-15-16	5/8"	7/8" 14h UNF	3/8" BSPT	**ZS2101617**	-
14-15-16	5/8"	7/8" 14h UNF	1/2" BSPT	**ZS2101621**	-
14-15-16	5/8"	7/8" 14h UNF	3/4" BSPT	**ZS2101626**	-
18-20	3/4"	1"1/16 12h UN	1/2" BSPT	**ZS2102021**	-
18-20	3/4"	1"1/16 12h UN	3/4" BSPT	**ZS2102026**	-
18-20	3/4"	1"1/16 12h UN	1" BSPT	**ZS2102033**	-
25	1"	1"5/16 12h UN	3/4" BSPT	**ZS2102526**	-
25	1"	1"5/16 12h UN	1" BSPT	**ZS2102533**	-
30-32	1" 1/4	1"5/8 12h UN	1" BSPT	**ZS2103233**	-
30-32	1" 1/4	1"5/8 12h UN	1 1/4" BSPT	**ZS2103242**	-
38	1" 1/2	1"7/8 12h UN	1 1/2" BSPT	**ZS2103848**	-

Racor macho JIC 37° - hembra fija NPT

Straight adaptor male JIC 37° - fixed female NPT

Adapteur mâle JIC 37° - femelle fixe NPT

Adattatore maschio JIC 37° - femmina fissa NPT

TUBO PIPE		ROSCA THREAD		Referencia Part n°	€
6	1/4"	7/16"-20h UNF	1/8" NPT	**ZS2950610**	-
6	1/4"	7/16"-20h UNF	1/4" NPT	**ZS2950613**	-
6	3/8"	7/16"-20h UNF	3/8" NPT	NEW **ZS2950617**	-
6	1/2"	7/16"-20h UNF	1/2" NPT	NEW **ZS2950621**	-
8	5/16"	1/2"-20h UNF	1/4" NPT	**ZS2950813**	-
8	5/16"	1/2"-20h UNF	3/8" NPT	**ZS2950817**	-
10	3/8"	9/16"-20h UNF	1/4" NPT	**ZS2951013**	-
10	3/8"	9/16"-20h UNF	3/8" NPT	**ZS2951017**	-
10	1/2"	9/16"-20h UNF	1/2" NPT	NEW **ZS2951021**	-
12	1/2"	3/4"-20h UNF	1/4" NPT	**ZS2951213**	-
12	1/2"	3/4"-20h UNF	3/8" NPT	**ZS2951217**	-
12	1/2"	3/4"-20h UNF	1/2" NPT	**ZS2951221**	-
14-15-16	5/8"	7/8"-14h UNF	1/2" NPT	**ZS2951621**	-
18-20	3/4"	1"1/16-12h UNF	3/4" NPT	**ZS2952026**	-
18-20	3/4"	1"1/16-12h UNF	1" NPT	**ZS2952033**	-
25	1"	1"5/16-12 UNF	3/4" NPT	NEW **ZS2952526**	-
25	1"	1"5/16-12 UNF	1" NPT	**ZS2952533**	-
25	1"	1"5/16-12 UN	1"1/4 NPT	**ZS2952542**	-
30-32	1" 1/4	1" 5/8-12h UNF	1" NPT	NEW **ZS2953233**	-
30-32	1" 1/4	1" 5/8-12h UNF	1" 1/4 NPT	**ZS2953242**	-
38	1" 1/2	1"7/8 12h UN	1" 1/2 NPT	NEW **ZS2953842**	-
38	1 1/2	1" 7/8-12h UNF	1" 1/2 NPT	**ZS2953848**	-
50	2" 1/2	2" 1/2 12h UNF	2" NPT	NEW **ZS2955060**	-

Adaptador Macho JIC - hembra giratoria JIC 37°

Adaptor male JIC - swivel female JIC

Adapteur mâle JIC x femelle tournante JIC

Adattatore maschio JIC 37° - femmina girevole JIC 37°

TUBO PIPE		ROSCA THREAD		Referencia Part n°	€
6	1/4"	7/16" 20 UNF	7/16" 20 UNF	**ZS7400606**	-
8	5/16"	1/2" 20 UNF	1/2" 20 UNF	**ZS7400808**	-
10	3/8"	9/16" 18 UNF	9/16" 18 UNF	**ZS7401010**	-
12	1/2"	3/4" 16 UNF	3/4" 16 UNF	**ZS7401212**	-
14-15-16	5/8"	7/8" 14 UNF	7/8" 14 UNF	**ZS7401616**	-
18-20	3/4"	1"1/16 12 UNF	1"1/16 12 UNF	**ZS7402020**	-
25	1"	1"5/16 12 UNF	1"5/16 12 UNF	**ZS7402525**	-

Racores JIC 37°

Flare fittings JIC 37°
Adapteurs JIC 37°
Raccordi JIC 37°

Racor reducción macho JIC 37° - hembra giratoria JIC 37°

Reducer adaptor male JIC 37° -swivel female JIC 37°

Adapteur réduction mâle JIC 37° - femelle tournante JIC 37°

Nipples di riduzione maschio - femmina girevole JIC 37°

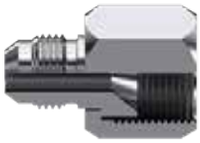

ROSCA (H) THREAD (F)	ROSCA (M) THREAD (M)	TUBO (H) PIPE (F)	TUBO (M) PIPE (M)	Referencia Part n°	€
9/16" 18h UNF	7/16" 20h UNF	10	6	**ZS2911006**	-
9/16" 18h UNF	3/4" 16h UNF	10	12	**ZS2911012**	-
9/16" 18h UNF	7/8" 14h UNF	10	14-15-16	**ZS2911016**	-
3/4" 16h UNF	7/16" 20h UNF	12	6	**ZS2911206**	-
3/4" 16h UNF	1/2" 20h UNF	12	8	**ZS2911208**	-
3/4" 16h UNF	9/16" 18h UNF	12	10	**ZS2911210**	-
3/4" 16h UNF	1"1/16 12h UN	12	18-20	**ZS2911220**	-
3/4" 16h UNF	1"5/16 12h UN	12	25	**ZS2911225**	-
7/8" 14h UNF	7/16" 20h UNF	14-15-16	6	**ZS2911606**	-
7/8" 14h UNF	9/16" 18h UNF	14-15-16	10	**ZS2911610**	-
7/8" 14h UNF	1"1/16 12h UN	14-15-16	18-20	**ZS2911620**	-
1"1/16 12h UN	7/16" 20h UNF	18-20	6	**ZS2912006**	-
1"1/16 12h UN	9/16" 18h UNF	18-20	10	**ZS2912010**	-
1"1/16 12h UN	3/4" 16h UNF	18-20	12	**ZS2912012**	-
1"5/16 12h UN	1"1/16 12h UN	25	18-20	**ZS2912520**	-
1" 5/8 12h UN	7/8" 14h UNF	32	16	**ZS2913216**	-
1" 5/8 12h UN	1"5/16 12h UN	32	20	**ZS2913220**	-
1" 5/8 12h UN	1"5/16 12h UN	30-32	25	**ZS2913225**	-
1"7/8 14h UNF	1" 5/8 12h UN	38	32	NEW **ZS2913832**	-

Pueden ser suministradas con tuerca libre o prensada */ Material could be delivered with loose or crimped nut* / Peut être livrée avec écrou libre ou pré-serti */ Fornibile con dado libero o pressato*

Racor reducción macho JIC 37 - hembra fija JIC 37°

Reducer adaptor male JIC 37° - fixed female JIC 37°

Adapteur réduction mâle JIC 37° - femelle fixe JIC 37°

Nipples di riduzione maschio - femmina fissa JIC 37°

TUBO (H) PIPE (F)	TUBO (M) PIPE (M)	ROSCA (H) THREAD (F)	ROSCA (M) THREAD (M)	Referencia Part n°	€
6	8	7/16" 20h UNF	1/2" 20h UNF	**ZS2900608**	-
6	10	7/16" 20h UNF	9/16" 18 UNF	**ZS2900610**	-
6	12	7/16" 20h UNF	3/4" 16h UNF	**ZS2900612**	-
6	25	7/16" 20h UNF	1"5/16 12h UN	**ZS2900625**	-
8	14-15-16	1/2" 20h UNF	7/8" 14h UNF	**ZS2900816**	-
8	18-20	1/2" 20h UNF	1"1/16 12h UN	**ZS2900820**	-
8	25	1/2" 20h UNF	1"5/16 12h UN	**ZS2900825**	-
10	8	9/16" 18h UNF	1/2" 20h UNF	**ZS2901008**	-
10	25	9/16" 18h UNF	1"5/16 12h UN	**ZS2901025**	-
12	30-32	3/4" 16h UNF	1"5/8 12h UN	**ZS2901232**	-
12	38	3/4" 16h UNF	1"7/8 12h UN	**ZS2901238**	-
14-15-16	12	7/8" 14h UNF	3/4" 16h UNF	**ZS2901612**	-
14-15-16	25	7/8" 14h UNF	1"5/16 12h UN	**ZS2901625**	-
14-15-16	30-32	7/8" 14h UNF	1"5/8 12h UN	**ZS2901632**	-
14-15-16	38	7/8" 14h UNF	1"7/8 12h UN	**ZS2901638**	-
18-20	30-32	1"1/16 12h UN	1"5/16 12h UN	**ZS2902025**	-
18-20	30-32	1"1/16 12h UN	1"5/8 12h UN	**ZS2902032**	-
25	30-32	1"5/16 12h UN	1"5/8 12h UN	**ZS2902532**	-
25	38	1"5/16 12h UN	1"7/8 12h UN	**ZS2902538**	-
38	30-32	1"7/8 12h UN	1"5/8 12h UN	**ZS2903832**	-

Racores JIC 37°

Flare fittings JIC 37°
Adapteurs JIC 37°
Raccordi JIC 37°

Hembra giratoria JIC 37° - macho NPT

Straight adaptor swivel female JIC 37° - male NPT pipe

Adapteur femelle tournante JIC 37° - mâle NPT

Niples femmina girevole JIC 37° - maschio NPT

ROSCA THREAD		Referencia Part n°	€
7/16"-20h UNF	1/4" NPT	**ZS1850613**	-
9/16"-18h UNF	3/8" NPT	**ZS1851017**	-
3/4"-16h UNF	3/8" NPT	**ZS1851217**	-
3/4"-16h UNF	1/2" NPT	**ZS1851221**	-
7/8"-14h UNF	1/2" NPT	**ZS1851621**	-
1"1/16-12h UNF	3/4" NPT	**ZS1852026**	-
1"5/16-12h UNF	1" NPT	**ZS1852533**	-
1" 7/8-12h UN	1" 1/2 NPT	**ZS1853848**	-

Juntas tóricas FKM verde para macho Métrico

FKM green o'ring for Metric thread

Joint torique FKM vert pour filetage métrique

O´ring FKM verde per maschio metrico

ROSCA THREAD	Referencia Part n°	€
M10x1	**JVMET10**	-
M14x1.5	**JVMET14**	-
M16x1.5	**JVMET16**	-
M18x1.5	**JVMET18**	-
M22x1.5	**JVMET22**	-
M27x2	**JVMET27**	-
M33x2	**JVMET33**	-
M42x2	**JVMET42**	-
M50x2	**JVMET50**	-

Juntas tóricas FKM verde para rosca UNF

FKM green o'ring for UNF thread

Joint torique FKM vert pour filetage UNF

O´ring FKM verde per filetto UNF

ROSCA THREAD	Referencia Part n°	€
7/16" UNF	**JVUNF06**	-
1/2" UNF	**JVUNF08**	-
9/16" UNF	**JVUNF10**	-
3/4" UNF	**JVUNF12**	-
7/8" UNF	**JVUNF16**	-
1" 1/16 UNF	**JVUNF20**	-
1"5/16 UNF	**JVUNF25**	-
1" 5/8 UNF	**JVUNF32**	-
1" 7/8 UNF	**JVUNF38**	-

Racor hembra giratoria - hembra giratoria JIC 37°

Straight adaptor swivel female JIC 37°

Adapteur femelle tournante JIC 37°

Niples femmina - femmina girevole JIC

TUBO PIPE		ROSCA THREAD	Referencia Part n°	€
6	1/4"	7/16" 20h UNF	**ZS73006**	-
8	5/16"	1/2" 20h UNF	**ZS73008**	-
10	3/8"	9/16" 18h UNF	**ZS73010**	-
12	1/2"	3/4" 16h UNF	**ZS73012**	-
14-15-16	5/8"	7/8" 14h UNF	**ZS73016**	-
18-20	3/4"	1"1/16 12h UN	**ZS73020**	-
25	1"	1"5/16 12h UN	**ZS73025**	-
32	1"1/4	1"5/8 12h UN	**ZS73032**	-
38	1"1/2	1"7/8 12h UN	**ZS73038**	-

Juntas tóricas FKM verde para macho BSP

FKM green o'ring for BSP thread

Joint torique FKM vert pour mâle BSP

O´ring FKM verde per maschio BSP

ROSCA THREAD	Referencia Part n°	€
1/8" BSP	**JVMBSP02**	-
1/4" BSP	**JVMBSP04**	-
3/8" BSP	**JVMBSP06**	-
1/2" BSP	**JVMBSP08**	-
3/4" BSP	**JVMBSP12**	-
1" BSP	**JVMBSP16**	-
1"1/4 BSP	**JVMBSP20**	-
1"1/2 BSP	**JVMBSP24**	-
2" BSP	**JVMBSP32**	-

Juntas para Macho JIC FKM verde

FKM green o'ring for JIC male thread

Joint FKM vert pour mâle JIC

O´ring FKM verde per filetto JIC

ROSCA THREAD	Referencia Part n°	€
7/16" 20h UNF	**JTVJIC07**	-
9/16" 18h UNF	**JTVJIC09**	-
3/4" 16h UNF	**JTVJIC12**	-
1"1/16 12h UNF	**JTVJIC17**	-
1" 5/16 12h UN	**JTVJIC21**	-
1"5/8 12h UNF	**JTVJIC26**	-

Racores JIC 37°

Flare fittings JIC 37°
Adapteurs JIC 37°
Raccordi JIC 37°

Codo 90° macho - macho JIC 37°

90° Elbow male - male JIC 37°

Coude 90° mâle - mâle JIC 37°

Adattatore a 90° maschio - maschio JIC 37°

TUBO PIPE		ROSCA THREAD		Referencia Part n°	€
6	1/4"	7/16" 20h UNF		**ZS50006**	-
8	5/16"	1/2" 20h UNF		**ZS50008**	-
10	3/8"	9/16" 18h UNF		**ZS50010**	-
12	1/2"	3/4" 16h UNF		**ZS50012**	-
14-15-16	5/8"	7/8" 14h UNF		**ZS50016**	-
18-20	3/4"	1"1/16 12h UN		**ZS50020**	-
25	1"	1"5/16 12h UN		**ZS50025**	-
30-32	1"1/4	1"5/8 12h UN		**ZS50032**	-
38	1"1/2	1"7/8 12h UN		**ZS50038**	-

Codo 90° macho JIC 37° - hembra giratoria JIC 37°

90° Elbow swivel female JIC 37° - male JIC 37°

Coude 90° mâle JIC 37° - femelle tournante JIC 37°

Adattatore a 90° maschio JIC 37° - femmina girevole JIC 37°

TUBO PIPE		ROSCA THREAD		Referencia Part n°	€
6	1/4"	7/16" 20h UNF	7/16" 20h UNF	**ZS67506**	-
8	5/16"	1/2" 20h UNF	1/2" 20h UNF	**ZS67508**	-
10	3/8"	9/16" 18h UNF	9/16" 18h UNF	**ZS67510**	-
12	1/2"	3/4" 16h UNF	3/4" 16h UNF	**ZS67512**	-
14-15-16	5/8"	7/8" 14h UNF	7/8" 14h UNF	**ZS67516**	-
18-20	3/4"	1"1/16 12h UNF	1"1/16 12h UNF	**ZS67520**	-
25	1"	1"5/16 12h UNF	1"5/16 12h UNF	**ZS67525**	-
30-32	1"1/4	1"5/8 12h UNF	1"5/8 12h UNF	**ZS67532**	-
38	1"1/2	1"7/8 12h UNF	1"7/8 12h UNF	**ZS67538**	-

Codo 90° macho JIC 37° - hembra fija NPT

90° Elbow male JIC 37° - fixed female NPT

Coude 90° JIC 37° - femelle fixe NPT

Adattatore a 90° maschio JIC 37° - femmina fissa NPT

TUBO PIPE		ROSCA THREAD		Referencia Part n°	€
6	1/4"	7/16" 20h UNF	1/4" NPT	**ZS7000613**	-
10	3/8"	9/16" 18h UNF	3/8" NPT	**ZS7001017**	-
12	1/2"	3/4" 16h UNF	1/2" NPT	**ZS7001221**	-
18-20	3/4"	1"1/16 12h UNF	3/4" NPT	**ZS7002026**	-
25	1"	1"5/16 12h UNF	1" NPT	**ZS7002533**	-

Codo 90° macho - macho JIC 37° con junta

90° Elbow male - male JIC 37° with o'ring

Coude 90° mâle - mâle JIC 37° avec o'ring

Adattatore a 90° maschio - maschio JIC 37° con o'ring

TUBO PIPE		ROSCA THREAD		Referencia Part n°	€
6	1/4"	7/16" 20h UNF		**ZS50006OR**	-
8	5/16"	1/2" 20h UNF		**ZS50008OR**	-
10	3/8"	9/16" 18h UNF		**ZS50010OR**	-
12	1/2"	3/4" 16h UNF		**ZS50012OR**	-
14-15-16	5/8"	7/8" 14h UNF		**ZS50016OR**	-
18-20	3/4"	1"1/16 12h UN		**ZS50020OR**	-
25	1"	1"5/16 12h UN		**ZS50025OR**	-
30-32	1" 1/4	1"5/8 12h UN		**ZS50032OR**	-
38	1" 1/2	1"7/8 12h UN		**ZS50038OR**	-

Codo 90° pasatabiques macho - macho JIC 37°

90° Bulkhead elbow male - male JIC 37°

Coude 90° passe cloison mâle-mâle JIC 37°

Adattatore a 90° passaparete maschio - maschio JIC 37°

TUBO PIPE		ROSCA THREAD		Referencia Part n°	€
6	1/4"	7/16" - 20h UNF	7/16" - 20h UNF	**ZS65006**	-
8	5/16"	1/2" - 20h UNF	1/2" - 20h UNF	**ZS65008**	-
10	3/8"	9/16" - 18h UNF	9/16" - 18h UNF	**ZS65010**	-
12	1/2"	3/4" - 16h UNF	3/4" - 16h UNF	**ZS65012**	-
14-15-16	5/8"	7/8" - 14h UNF	7/8" - 14h UNF	**ZS65016**	-
18-20	3/4"	1" 1/16 - 12h UN	1" 1/16 - 12h UN	**ZS65020**	-
25	1"	1" 5/16 - 12h UN	1" 5/16 - 12h UN	**ZS65025**	-

Codo 90° regulable macho JIC 37° - macho BSP

90° Adjustable stud elbow male JIC 37°-male BSP

Coude 90° orientable mâle JIC 37°- mâle BSP

Adattatore 90° maschio orientabile BSP – maschio JIC 37°

TUBO PIPE		ROSCA THREAD		Referencia Part n°	€
6	1/4"	7/16" 20h UNF	1/4" BSP	**ZS5700613**	-
6	1/4"	1/2" 20h UNF	1/4" BSP	**ZS5700813**	-
10	3/8"	9/16 18H UNF	1/4" BSP	**ZS5701013**	-
10	3/8"	9/16" 18h UNF	3/8" BSP	**ZS5701017**	-
12	1/2"	3/4 20H UNF	3/8" BSP	**ZS5701217**	-
12	1/2"	3/4" 16h UNF	1/2" BSP	**ZS5701221**	-
14-15-16	5/8"	7/8" 14h UNF	1/2" BSP	**ZS5701621**	-
18-20	3/4"	1"1/16 12h UN	3/4" BSP	**ZS5702026**	-
25	1"	1"5/16 12h UN	1" BSP	**ZS5702533**	-
30-32	1" 1/4	1 5/8 12H UN	1" 1/4 BSP	**ZS5703242**	-
38	1" 1/2	1"7/8 12h UN	1"1/2 BSP	**ZS5703848**	-

Racores JIC 37°

Flare fittings JIC 37°
Adapteurs JIC 37°
Raccordi JIC 37°

Codo 90° regulable macho O'Ring Boss - macho JIC 37

90° Adjustable elbow male O'Ring Boss -male JIC 37°

Coude 90° orientable mâle O'Ring Boss - mâle JIC 37°

Adattatore 90° maschio orientabile O'ring Boss – maschio JIC 37°

TUBO PIPE		ROSCA THREAD		Referencia Part n°	€
6	1/4"	7/16"-20h UNF	7/16"-20h UNF	**ZS57506**	*
8	5/16"	1/2"-20h UNF	1/2"-20h UNF	**ZS57508**	*
10	3/8"	9/16"-18h UNF	9/16"-18h UNF	**ZS57510**	*
12	1/2"	3/4"-16h UNF	3/4"-16h UNF	**ZS57512**	*
14-15-16	5/8"	7/8"-14h UNF	7/8"-14h UNF	**ZS57516**	*
18-20	3/4"	1"1/16-12h UN	1"1/16-12h UN	**ZS57520**	*
25	1"	1"5/16-12h UN	1"5/16-12h UN	**ZS57525**	*

***Ver precios en p. 186 (ADAPTADORES O´RING BOSS)** / **See prices in p. 186 (O´RING BOSS ADAPTORS)* / *Voir prix à la p. 186 (ADAPTEURS O´RING BOSS) / **Vedere prezzi p. 186 (ADATTATORI O´RING BOSS)*

Codo 90° macho JIC 37° - macho BSPT

90° Elbow male JIC 37° - male BSPT

Coude 90° mâle JIC 37° - mâle BSPT

Adattatore a 90° maschio JIC 37° - maschio BSPT

TUBO PIPE		ROSCA THREAD		Referencia Part n°	€
6	1/4"	1/8" BSPT	7/16" 20h UNF	**ZS5500610**	-
6	1/4"	1/4" BSPT	7/16" 20h UNF	**ZS5500613**	-
8	5/16"	1/8" BSPT	1/2" 20h UNF	**ZS5500810**	-
8	5/16"	1/4" BSPT	1/2" 20h UNF	**ZS5500813**	-
10	3/8"	1/4" BSPT	9/16" 18h UNF	**ZS5501013**	-
10	3/8"	3/8" BSPT	9/16" 18h UNF	**ZS5501017**	-
10	3/8"	1/2" BSPT	9/16" 18h UNF	**ZS5501021**	-
12	1/2"	1/4" BSPT	3/4" 16h UNF	**ZS5501213**	-
12	1/2"	3/8" BSPT	3/4" 16h UNF	**ZS5501217**	-
12	1/2"	1/2" BSPT	3/4" 16h UNF	**ZS5501221**	-
14-15-16	5/8"	3/8" BSPT	7/8" 14h UNF	**ZS5501617**	-
14-15-16	5/8"	1/2" BSPT	7/8" 14h UNF	**ZS5501621**	-
14-15-16	5/8"	3/4" BSPT	7/8" 14h UNF	**ZS5501626**	-
18-20	3/4"	1/2" BSPT	1"1/16 12h UN	**ZS5502021**	-
18-20	3/4"	3/4" BSPT	1"1/16 12h UN	**ZS5502026**	-
25	1"	3/4" BSPT	1"5/16 12h UN	**ZS5502526**	-
25	1"	1" BSPT	1"5/16 12h UN	**ZS5502533**	-
30-32	1" 1/4	1 1/4" BSPT	1"5/8 12h UN	**ZS5503242***	-

*** Hasta fin de existencias** / *Until end of stock* / Jusqu´à la fin du stock / *Fino ad esaurimento*

Codo 90° macho NPT - hembra giratoria JIC 37°

90° Elbow male NPT - swivel female JIC 37°

Coude 90° mâle NPT - femelle tournante JIC 37°

Adattatore a 90° maschio NPT - femmina girevole JIC 37°

ROSCA THREAD		Referencia Part n°	€
1/8" NPT	7/16"-20h UNF	**ZS5950610**	-
1/4" NPT	1/2"-20h UNF	**ZS5950813**	-
1/4" NPT	9/16"-18h UNF	**ZS5951013**	-
3/8" NPT	3/4"-16h UNF	**ZS5951217**	-
1/2" NPT	7/8"-14h UNF	**ZS5951621**	-
3/4" NPT	1"1/16"-12h UN	**ZS5952026**	-
1" NPT	1"5/16"-12h UN	**ZS5952533**	-

Codo 90° macho JIC 37° - macho NPT

90° Elbow male JIC 37° - male NPT

Coude 90° mâle JIC 37° - mâle NPT

Adattatore a 90° maschio JIC 37° - maschio NPT

TUBO PIPE		ROSCA THREAD		Referencia Part n°	€
6	1/4"	1/8" NPT	7/16" 20h UNF	**ZS5250610**	-
6	1/4"	1/4" NPT	7/16" 20h UNF	**ZS5250613**	-
8	5/16"	1/8" NPT	1/2" 20h UNF	**ZS5250810**	-
8	5/16"	1/4" NPT	1/2" 20h UNF	**ZS5250813**	-
10	3/8"	1/4" NPT	9/16" 18h UNF	**ZS5251013**	-
10	3/8"	3/8" NPT	9/16" 18h UNF	**ZS5251017**	-
10	3/8"	1/2" NPT	9/16" 18h UNF	**ZS5251021**	-
12	1/2"	1/4" NPT	3/4" 16h UNF	**ZS5251213**	-
12	1/2"	3/8" NPT	3/4" 16h UNF	**ZS5251217**	-
12	1/2"	1/2" NPT	3/4" 16h UNF	**ZS5251221**	-
14-15-16	5/8"	3/8" NPT	7/8" 14h UNF	**ZS5251617**	-
14-15-16	5/8"	1/2" NPT	7/8" 14h UNF	**ZS5251621**	-
14-15-16	5/8"	3/4" NPT	7/8" 14h UNF	**ZS5251626**	-
18-20	3/4"	1/2" NPT	1"1/16 12h UN	**ZS5252021**	-
18-20	3/4"	3/4" NPT	1"1/16 12h UN	**ZS5252026**	-
25	1"	3/4" NPT	1"5/16 12h UN	**ZS5252526**	-
25	1"	1" NPT	1"5/16 12h UN	**ZS5252533**	-

Racores JIC 37°

Flare fittings JIC 37°
Adapteurs JIC 37°
Raccordi JIC 37°

Codo 45° macho JIC 37° - hembra giratoria JIC 37°

45° Elbow male JIC 37° - swivel female JIC 37°

Coude 45° mâle JIC 37° - femelle tournante JIC 37°

Adattatore a 45° maschio JIC 37° - femmina girevole JIC 37°

TUBO PIPE		ROSCA THREAD		Referencia Part n°	€
6	1/4"	7/16" 20h UNF	7/16" 20h UNF	**ZS69006**	-
8	5/16"	1/2" 20h UNF	1/2" 20h UNF	**ZS69008**	-
10	3/8"	9/16" 18h UNF	9/16" 18h UNF	**ZS69010**	-
12	1/2"	3/4" 16h UNF	3/4" 16h UNF	**ZS69012**	-
14-15-16	5/8"	7/8" 14h UNF	7/8" 14h UNF	**ZS69016**	-
18-20	3/4"	1"1/16 12h UN	1"1/16 12h UN	**ZS69020**	-
25	1"	1"5/16 12h UN	1"5/16 12h UN	**ZS69025**	-

Codo 45° regulable macho - macho JIC 37°

45° Adjustable stud elbow male - male JIC 37°

Coude 45° orientable mâle - mâle JIC 37°

Adattatore a 45° orientabile maschio UNF - maschio JIC 37°

TUBO PIPE		ROSCA THREAD		Referencia Part n°	€
6	1/4"	7/16" - 20h UNF	7/16" - 20h UNF	**ZS77506**	-
8	5/16"	1/2" - 20h UNF	1/2" - 20h UNF	**ZS77508**	-
10	3/8"	9/16" - 18h UNF	9/16" - 18h UNF	**ZS77510**	-
12	1/2"	3/4" - 16h UNF	3/4" - 16h UNF	**ZS77512**	-
14-15-16	5/8"	7/8" - 14h UNF	7/8" - 14h UNF	**ZS77516**	-
18-20	3/4"	1" 1/16 - 12h UN	1" 1/16 - 12h UN	**ZS77520**	-

Codo 45° macho JIC 37° - macho NPT

45° Elbow male JIC 37° - male NPT pipe

Coude 45° mâle JIC 37° - mâle NPT

Adattatore a 45° maschio JIC 37° - maschio NPT

TUBO PIPE		ROSCA THREAD		Referencia Part n°	€
6	1/4"	1/4" NPT	7/16" 20h UNF	**ZS7250613**	-
10	3/8"	3/8" NPT	9/16" 18h UNF	**ZS7251017**	-
12	1/2"	1/2" NPT	3/4" 16h UNF	**ZS7251221**	-
18-20	3/4"	3/4" NPT	1"1/16 12h UN	**ZS7252026**	-
25	1"	1" NPT	1"5/16 12h UN	**ZS7252533**	-

Racores JIC 37°

Flare fittings JIC 37°
Adapteurs JIC 37°
Raccordi JIC 37°

TE macho - macho - macho JIC 37°

Union tee male JIC 37°

Té égal mâle JIC 37°

Adattatore a T maschio JIC 37°

TUBO PIPE		ROSCA THREAD	Referencia Part n°	€
6	1/4"	7/16" 20h UNF	**ZS50506**	-
8	5/16"	1/2" 20h UNF	**ZS50508**	-
10	3/8"	9/16" 18h UNF	**ZS50510**	-
12	1/2"	3/4" 16h UNF	**ZS50512**	-
14-15-16	5/8"	7/8" 14h UNF	**ZS50516**	-
18-20	3/4"	1"1/16 12h UN	**ZS50520**	-
25	1"	1"5/16 12h UN	**ZS50525**	-
30-32	1" 1/4	1"5/8 12h UN	**ZS50532**	-
38	1" 1/2	1"7/8 12h UN	**ZS50538**	-

TE macho - macho - macho JIC 37° con junta

Union tee male JIC 37° with o'ring

Té égal mâle JIC 37° avec o'ring

Adattatore a T maschio JIC 37° con o'ring

TUBO PIPE		ROSCA THREAD	Referencia Part n°	€
6	1/4"	7/16" 20h UNF	**ZS50506OR**	-
8	5/16"	1/2" 20h UNF	**ZS50508OR**	-
10	3/8"	9/16" 18h UNF	**ZS50510OR**	-
12	1/2"	3/4" 16h UNF	**ZS50512OR**	-
14-15-16	5/8"	7/8" 14h UNF	**ZS50516OR**	-
18-20	3/4"	1"1/16 12h UN	**ZS50520OR**	-
25	1"	1"5/16 12h UN	**ZS50525OR**	-
30-32	1" 1/4	1"5/8 12h UN	**ZS50532OR**	-
38	1" 1/2	1"7/8 12h UN	**ZS50538OR**	-

TE macho - macho - hembra giratoria JIC 37°

Tee male JIC 37° - male JIC 37° - swivel nut JIC 37°

Té mâle JIC 37° - mâle JIC 37° - femelle tournante JIC 37° au latéral

Adattatore a T maschio - maschio - femmina girevole JIC 37°

TUBO PIPE		ROSCA THREAD	Referencia Part n°	€
6	1/4"	7/16" 20h UNF	**ZS68006**	-
8	5/16"	1/2" 20h UNF	**ZS68008**	-
10	3/8"	9/16" 18h UNF	**ZS68010**	-
12	1/2"	3/4" 16h UNF	**ZS68012**	-
14-15-16	5/8"	7/8" 14h UNF	**ZS68016**	-
18-20	3/4"	1"1/16 12h UN	**ZS68020**	-
25	1"	1"5/16 12h UN	**ZS68025**	-
32	1" 1/4	1"5/8 12h UN	**ZS68032**	-
38	1" 1/2	1"7/8 12h UN	**ZS68038**	-

TE macho - hembra giratoria - macho JIC 37°

Tee male JIC 37° - swivel nut JIC 37° - male JIC 37°

Té mâle JIC 37° - femelle tournante JIC 37°- mâle JIC 37°

Adattatore a T maschio - femmina girevole - maschio JIC 37°

TUBO PIPE		ROSCA THREAD	Referencia Part n°	€
6	1/4"	7/16" 20h UNF	**ZS68506**	-
8	5/16"	1/2" 20h UNF	**ZS68508**	-
10	3/8"	9/16" 18h UNF	**ZS68510**	-
12	1/2"	3/4" 16h UNF	**ZS68512**	-
14-15-16	5/8"	7/8" 14h UNF	**ZS68516**	-
18-20	3/4"	1"1/16 12h UN	**ZS68520**	-
25	1"	1"5/16 12h UN	**ZS68525**	-
32	1" 1/4	1"5/8 12h UN	**ZS68532**	-
38	1" 1/2	1"7/8 12h UN	**ZS68538**	-

TE macho JIC 37° - macho JIC 37° - macho NPT

Tee male JIC 37° - male JIC 37° - male NPT

Té mâle JIC 37° - mâle JIC 37° - mâle NPT

Adattatore a T maschio JIC 37° - maschio JIC 37° - maschio NPT

ROSCA THREAD			Referencia Part n°	€
7/16"-20h UNF	7/16"-20h UNF	1/8" NPT	**ZS6300610**	-
1/2"-20h UNF	1/2"-20h UNF	1/4" NPT	**ZS6300813**	-
9/16"-18h UNF	9/16"-18h UNF	1/4" NPT	**ZS6301013**	-
3/4"-16h UNF	3/4"-16h UNF	3/8" NPT	**ZS6301217**	-
7/8"-14h UNF	7/8"-14h UNF	1/2" NPT	**ZS6301621**	-
1"1/16-12h UN	1"1/16-12h UN	3/4" NPT	**ZS6302026**	-
1"5/16-12h UN	1"5/16-12h UN	1" NPT	**ZS6302533**	-

TE macho JIC 37° - macho NPT - macho JIC 37°

Tee male JIC 37° - male NPT - male JIC 37°

Té mâle JIC 37° - mâle NPT - mâle JIC 37°

Adattatore a T maschio JIC 37° - maschio NPT - maschio JIC 37°

ROSCA THREAD			Referencia Part n°	€
7/16"-20h UNF	1/8" NPT	7/16"-20h UNF	**ZS6250610**	-
1/2"-20h UNF	1/4" NPT	1/2"-20h UNF	**ZS6250813**	-
9/16"-18h UNF	1/4" NPT	9/16"-18h UNF	**ZS6251013**	-
3/4"-16h UNF	3/8" NPT	3/4"-16h UNF	**ZS6251217**	-
7/8"-14h UNF	1/2" NPT	7/8"-14h UNF	**ZS6251621**	-
1"1/16-12h UN	3/4" NPT	1"1/16-12h UN	**ZS6252026**	-
1"5/16-12h UN	1" NPT	1"5/16-12h UN	**ZS6252533**	-

DICSA

Sistema logístico inteligente. Optimizamos tus envíos.

Cada día más cerca de ti. Compañía global.

Closer to you everyday. Worldwide company.

Smart logistics system. We optimize delivery operations.

www.dicsaes.com

Tubo SCH 143
SCH Rigid pipe
Tube rigide SCH
Tubo rigido SCH

Racores SCH - BUTT WELD 144
SCH BUTT WELD fittings
Raccords SCH - BUTT WELD
Raccordi SCH - BUTT WELDING

Racores SOCKET WELD 146
SOCKET WELD fittings
Raccords SOCKET WELD
Raccordi SOCKET WELD

Bridas SAE 148
SAE Flanges
Brides SAE
Flange SAE

Abrazaderas 155
Clamps
Colliers
Collari fissatubo

03

TUBO RÍGIDO SCH / RACORES SCH / BRIDAS SAE / ABRAZADERAS

SCH Rigid pipe/ SCH fittings / SAE Flanges / Clamps

Tube rigide SCH / Embouts SCH/ Brides SAE / Colliers

Tubo rigido SCH/Raccordi SCH/Flange SAE/Collari fissatubo

Tubo SCH

SCH Rigid pipe
Tube rigide SCH
Tubo rigido SCH

Tubo SCH10 ▪ Schedule 10 ▪ Schedule 10 ▪ Schedule 10 | 143

ZTH10

ZTH10...-3

Tubo SCH40 ▪ Schedule 40 ▪ Schedule 40 ▪ Schedule 40 | 143

ZTH40

ZTH40...-3

Racores SCH - BUTT WELD

SCH BUTT WELD fittings
Raccords SCH - BUTT WELD
Raccordi SCH - BUTT WELDING

Racores Tubo SCH - BW ▪ SCH -BW Pipe Fittings ▪ Raccords SCH - BW ▪ Raccordi SCH - BW | 144

ZS9010

ZST100

ZSR100

ZSC100

ZS9040

ZST400

ZSR400

ZSC400

Racores SOCKET WELD

SOCKET WELD fittings
Raccords SOCKET WELD
Raccordi SOCKET WELD

Racores SOCKET WELD 3000 ▪ SOCKET WELD 3000 fittings ▪ Raccords SOCKET WELD 3000 ▪ SOCKET WELD 3000 raccordi | 146

ZSW390

ZSW3C

ZSW3T

ZSW3CR

ZSW3M

Racores SOCKET WELD 6000 ▪ SOCKET WELD 6000 fittings ▪ Raccords SOCKET WELD 6000 ▪ SOCKET WELD 6000 raccordi | 146

ZSW690

ZSW6M

Bridas SAE

SAE Flanges
Brides SAE
Flange SAE

Bridas para flexibles ▪ SAE Flanges for hoses ▪ Brides SAE pour flexibles ▪ Flange SAE per tubi flessibili | 148

ZBBP

ZBBE

ZBCE

Bridas roscadas ▪ Threaded flanges ▪ Brides taraudées ▪ Flange filettate | 149

ZBBRG

ZBCRG

ZB90RG

Bridas soldables tubo Gas ▪ Welding flanges for gas tube ▪ Brides à souder pour tube gaz ▪ Flange a saldare per tubo gas | 150

ZBBSG

ZBCSG

ZB90SG

Bridas soldables tubo Métrico ▪ Welding flanges for metric tube ▪ Brides à souder pour tube métrique ▪ Flange a saldare per tubo Metrico | 151

ZBBSM

ZBCSM

ZB90SM

Bridas ciegas ▪ Blind flanges ▪ Brides avec obturateur fermé ▪ Flange cieche | 152

ZBBC

ZBCC

Conos soldar ▪ Welding adaptors for flanges ▪ Collets à souder ▪ Ogive a saldare | 153

ZBSM*1

ZBSG*1

ZBSM*0

ZBSG*0

ZBSW

Accesorios bridas ▪ Flange accessories ▪ Accessoires pour brides ▪ Accessori flange | 154

ZTB

JBR

ORING

Abrazaderas

Clamps
Colliers
Collari fissatubo

Abrazaderas completas serie ligera ▪ Complete clamps light serie ▪ Colliers complets série légère ▪ Collari fissatubo completo serie leggera | 155

ZA40AZ ZA40AZPL ZA41AZ ZA41AZPL

Componentes abrazaderas serie ligera ▪ Components for clamps light serie ▪ Composants pour colliers série légère ▪ Componenti per collari fissatubo serie leggera | 156

A C ZAPIN ZAPS ZAVTC ZAVTE ZAVTA ZAPA ZAPT ZAPG

Dobles / paralelas ▪ Double clamp - parallel ▪ Colliers de fixation doubles ▪ Collari fissatubo doppi | 159

ZAZCFS ZADPIN ZADPS AD C ZADVTE ZADP ZADVT ZADAG

Abrazaderas serie pesada ▪ Clamps heavy serie ▪ Colliers série lourde ▪ Collari fissatubo serie pesante | 161

ZAZCPS AMPP C ZAPINP ZAPSP ZAVTE ZAPVTA ZAPA

Accesorios abrazaderas ▪ Accesories for clamps ▪ Accessoires pour colliers ▪ Accessori per collari fissatubo | 162

TC/TS

Tubo SCH

SCH Rigid pipe
Tube rigide SCH
Tubo rigido SCH

Tubo rígido SCH10 - AISI 316 - 6 METROS

SCH 10 rigid pipe - 6 metres- AISI 316

Tube rigide SCH10 - 6 metres- AISI 316

Tubo rígido SCH10 - AISI 316- 6 metri

DN	Ø EXT. Ø OUTER	Espesor (mm) Thickness (mm)	Referencia Part n°	€/M
1/2"	21.3	2.11	**ZTH10SC008**	-
3/4"	26.7	2.11	**ZTH10SC012**	-
1"	33.4	2.77	**ZTH10SC016**	-
1" 1/4	42.2	2.77	**ZTH10SC020**	-
1" 1/2	48.3	2.77	**ZTH10SC024**	-
2"	60.3	2.77	**ZTH10SC032**	-

Tubo rígido SCH40 - AISI 316 - 6 METROS

SCH 40 rigid pipe - 6 meters - AISI 316

Tube rigide SCH40 - 6 metres - AISI 316

Tubo rígido SCH40 - AISI 316 - 6 metri

DN	Ø EXT. Ø OUTER	Espesor (mm) Thickness (mm)	Referencia Part n°	€/M
1/2"	21.3	2.77	**ZTH40SC008**	-
3/4"	26.7	2.87	**ZTH40SC012**	-
1"	33.4	3.38	**ZTH40SC016**	-
1" 1/4	42.2	3.56	**ZTH40SC020**	-
1" 1/2	48.3	3.68	**ZTH40SC024**	-
2"	60.3	3.91	**ZTH40SC032**	-

Tubo rígido SCH10 - AISI 316 - 3 METROS

SCH 10 rigid pipe - 3 meters - AISI 316

Tube rigide SCH10 - 3 metres - AISI 316

Tubo rígido SCH10 - AISI 316 - 3 metri

DN	Ø EXT. Ø OUTER	Espesor (mm) Thickness (mm)	Referencia Part n°	€/M
1/2"	21.3	2.11	**ZTH10SC008-3**	-
3/4"	26.7	2.11	**ZTH10SC012-3**	-
1"	33.4	2.77	**ZTH10SC016-3**	-
1" 1/4	42.2	2.77	**ZTH10SC020-3**	-
1" 1/2	48.3	2.77	**ZTH10SC024-3**	-
2"	60.3	2.77	**ZTH10SC032-3**	-

Tubo rígido SCH40 - AISI 316 - 3 METROS

SCH 40 rigid pipe - 3 metres- AISI 316

Tube rigide SCH40 - 3 metres- AISI 316

Tubo rígido SCH40 - AISI 316 - 3 metri

DN	Ø EXT. Ø OUTER	Espesor (mm) Thickness (mm)	Referencia Part n°	€/M
1/2"	21.3	2.77	**ZTH40SC008-3**	-
3/4"	26.7	2.87	**ZTH40SC012-3**	-
1"	33.4	3.38	**ZTH40SC016-3**	-
1" 1/4	42.2	3.56	**ZTH40SC020-3**	-
1" 1/2	48.3	3.68	**ZTH40SC024-3**	-
2"	60.3	3.91	**ZTH40SC032-3**	-

Racores SCH - BUTT WELD

SCH BUTT WELD fittings
Raccords SCH - BUTT WELD
Raccordi SCH - BUTT WELDING

Codo 90 SCH10

Elbow 90 Sch10

Coude 90 Sch10

Gomito 90 per Sch10

DN	Referencia Part n°	€
1/2"	ZS9010008	-
3/4"	ZS9010012	-
1"	ZS9010016	-
1" 1/4	ZS9010020	-
1" 1/2	ZS9010024	-
2"	ZS9010032	-

Te SCH10

Tee Sch10

Té Sch10

Raccordo a T Sch10

DN	Referencia Part n°	€
1/2"	ZST10008	-
3/4"	ZST10012	-
1"	ZST10016	-
1" 1/4	ZST10020	-
1" 1/2	ZST10024	-
2"	ZST10032	-

Reducción SCH10

Reduction Sch10

Réduction Sch10

Riduzione Sch10

DN	Referencia Part n°	€
3/4" - 1/2"	ZSR10012008	-
1" - 3/4"	ZSR10016012	-
1"1/4 - 1"	ZSR10020016	-
1" 1/2 - 1" 1/4	ZSR10024020	-
2" - 1" 1/2	ZSR10032024	-

Tapón SCH10

Cap Sch10

Bouchon Sch 10

Tappo Sch10

DN	Referencia Part n°	€
1/2"	ZSC10008	-
3/4"	ZSC10012	-
1"	ZSC10016	-
1" 1/4	ZSC10020	-
1" 1/2	ZSC10024	-
2"	ZSC10032	-

Racores SCH - BUTT WELD

SCH BUTT WELD fittings
Raccords SCH - BUTT WELD
Raccordi SCH - BUTT WELDING

Codo 90 SCH40

Elbow 90 Sch40

Coude 90 Sch40

Gomito 90 per Sch40

DN	Referencia Part n°	€
1/2"	ZS9040008	-
3/4"	ZS9040012	-
1"	ZS9040016	-
1" 1/4	ZS9040020	-
1" 1/2	ZS9040024	-
2"	ZS9040032	-

Te Inox SCH40

Tee Sch40

Té Sch40

Raccordo a T Sch40

DN	Referencia Part n°	€
1/2"	ZST40008	-
3/4"	ZST40012	-
1"	ZST40016	-
1" 1/4	ZST40020	-
1" 1/2	ZST40024	-
2"	ZST40032	-

Reducción Inox SCH40

Reduction Sch40

Réduction Sch40

Riduzione Sch40

DN	Referencia Part n°	€
3/4" - 1/2"	ZSR40012008	-
1" - 3/4"	ZSR40016012	-
1"1/4 - 1"	ZSR40020016	-
1" 1/2 - 1" 1/4	ZSR40024020	-
2" - 1" 1/2"	ZSR40032024	-

Tapón Inox SCH40

Cap Sch40

Bouchon Sch40

Tappo Sch40

DN	Referencia Part n°	€
1/2"	ZSC40008	-
3/4"	ZSC40012	-
1"	ZSC40016	-
1" 1/4	ZSC40020	-
1" 1/2	ZSC40024	-
2"	ZSC40032	-

Racores SOCKET WELD

SOCKET WELD fittings
Raccords SOCKET WELD
Raccordi SOCKET WELD

Racores SOCKET WELD 3000 Codo 90

SOCKET WELD 3000 fittings Elbow 90

Raccords SOCKET WELD 3000 Coude 90

Raccordo 90° SOCKET WELD 3000

DN	Referencia Part n°	€
1/2"	ZSW39008	-
3/4"	ZSW39012	-
1"	ZSW39016	-
1" 1/4	ZSW39020	-
1" 1/2	ZSW39024	-
2"	ZSW39032	-

Racores SOCKET WELD 3000 Cap

SOCKET WELD 3000 Cap Fittings

Raccords à chapeau SOCKET WELD 3000

Tappo SOCKET WELD 3000

DN	Referencia Part n°	€
1/2"	ZSW3C08	-
3/4"	ZSW3C12	-
1"	ZSW3C16	-
1"1/4	ZSW3C20	-
1"1/2	ZSW3C24	-
2"	ZSW3C32	-

Racores SOCKET WEL 3000 Te

SOCKET WELD 3000 Tee fittings

Raccords en T SOCKET WELD 3000

Raccordo a T SOCKET WELD 3000

DN	Referencia Part n°	€
1/2"	ZSW3T08	-
3/4"	ZSW3T12	-
1"	ZSW3T16	-
1"1/4	ZSW3T20	-
1"1/2	ZSW3T24	-
2"	ZSW3T32	-

Racores SOCKET WELD 3000 Cruz

SOCKET WELD 3000 Cross Fittings

Raccords croix SOCKET WELD 3000

Raccordo a croce SOCKET WELD 3000

DN	Referencia Part n°	€
1/2"	ZSW3CR08	-
3/4"	ZSW3CR12	-
1"	ZSW3CR16	-
1"1/4	ZSW3CR20	-
1"1/2	ZSW3CR24	-
2"	ZSW3CR32	-

Racores SOCKET WELD 3000 Manguito

SOCKET WELD 3000 Couplings Fittings

SOCKET WELD 3000 Accouplements Raccords

Manicotto SOCKET WELD 3000

DN	Referencia Part n°	€
1/2"	ZSW3M08	-
3/4"	ZSW3M12	-
1"	ZSW3M16	-
1"1/4	ZSW3M20	-
1"1/2	ZSW3M24	-
2"	ZSW3M32	-

Racores SOCKET WELD 6000 Codo 90

SOCKET WELD 6000 fittings Elbow 90

Raccords SOCKET WELD 6000 Coude 90

Raccordo 90° SOCKET WELD 6000

DN	Referencia Part n°	€
1/2"	ZSW69008	-
3/4"	ZSW69012	-
1"	ZSW69016	-
1"1/4	ZSW69020	-

Racores SOCKET WELD 6000 Manguito

SOCKET WELD 6000 Couplings FittingsFittings

SOCKET WELD 6000 Accouplements Raccords

Manicotto SOCKET WELD 6000

DN	Referencia Part n°	€
1/2"	ZSW6M08	-
3/4"	ZSW6M12	-
1"	ZSW6M16	-
1"1/4	ZSW6M20	-

BRIDAS SAE

SAE flanges
Brides SAE
Flangia SAE

Características comunes
Common characteristics
Données communes
Caratteristiche comuni

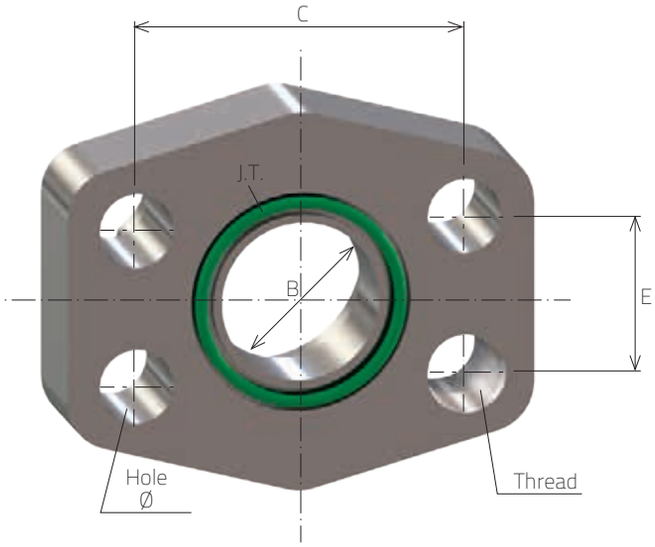

Bridas 3000 PSI
Flanges 3000 PSI
Brides 3000 PSI
Flangia 3000 PSI

Tamaño	Max. pre.	B	C	E	O'ring NBR	Junta PU	Ø	Tornillo *	Rosca
1/2"	345 bar	13	38,1	17,48	18,64 x 3,53	JBR08	9	TB8X30	M8
3/4"	345 bar	19	47,63	22,23	24,99 x 3,53	JBR12	11	TB10X35	M10
1"	345 bar	25	52,37	26,19	32,92 x 3,53	JBR16	11	TB10X35	M10
1 1/4"	276 bar	32	58,72	30,18	37,70 x 3,53	JBR20	11,5	TB10X40	M10
1 1/2"	207 bar	38	69,85	35,71	47,22 x 3,53	JBR24	13,5	TB12X45	M12
2"	207 bar	51	77,77	42,88	56,74 x 3,53	JBR32	13,5	TB12X45	M12
2 1/2"	172 bar	63	88,9	50,8	66,27 x 3,53		13,5	TB12X45	M12
3"	138 bar	73	106,38	61,93	85,32 x 3,53		17,5	TB16X50	M16
3 1/2"	34 bar	89	120,65	69,85	98,02 x 3,53		17,5	TB16X50	M16
4"	34 bar	99	130,18	77,77	110,72 x 3,53		17,5	TB16X50	M16

Bridas 6000 PSI
Flanges 6000 PSI
Brides 6000 PSI
Flangia 6000 PSI

Tamaño	Max. pre.	B	C	E	O'ring NBR	Junta PU	Ø	Tornillo *	Rosca
1/2"	414 bar	13	40,49	18,24	18,64 x 3,53	JBR08	9	TB8X30	M8
3/4"	414 bar	19	50,8	23,8	24,99 x 3,53	JBR12	11	TB10X40	M10
1"	414 bar	25	57,15	27,76	32,92 x 3,53	JBR16	13	TB12X45	M12
1 1/4"	414 bar	32	66,68	31,75	37,70 x 3,53	JBR20	15	TB14X45	M14
1 1/2"	414 bar	38	79,38	36,5	47,22 x 3,53	JBR24	17	TB16X50	M16
2"	414 bar	51	98,82	44,45	56,74 x 3,53	JBR32	21	TB20X70	M20

* Tornillos en acero carbono. Para tornillos en acero inoxidable, pedir ZTB...
Screws are in carbon steel. For Stainless Steel screws, ask for ZTB... part number.
Les vis sont en acier carbone. Pour vis en acier inoxydable, veuillez demander les références ZTB ...
Le viti sono in acciaio al carbonio. Per viti in acciaio inox, ordinare con codice ZTB...

Bridas SAE

SAE Flanges
Brides SAE
Flange SAE

Brida partida pasante

SAE Split flange

Demi-bride passage total

Semiflangia SAE

SERIE SERIES	Ø INT. Ø INNER	TAMAÑO SIZE	Referencia Part n°	€
3000 PSI	30.2	1/2"	**ZBBP308302**	*
3000 PSI	38.1	3/4"	**ZBBP312381**	*
3000 PSI	44.5	1"	**ZBBP316445**	*
3000 PSI	50.8	1"1/4	**ZBBP320508**	*
3000 PSI	60.3	1"1/2	**ZBBP324603**	*
3000 PSI	71.4	2"	**ZBBP332714**	*
3000 PSI	84.1	2" 1/2	**ZBBP340841**	*
3000 PSI	102.4	3"	**ZBBP3481024**	*
3000 PSI	127	4"	**ZBBP364127**	*
6000 PSI	31.8	1/2"	**ZBBP608318**	*
6000 PSI	41.3	3/4"	**ZBBP612413**	*
6000 PSI	47.6	1"	**ZBBP616476**	*
6000 PSI	54	1"1/4	**ZBBP620540**	*
6000 PSI	63.5	1"1/2	**ZBBP624635**	*
6000 PSI	79.4	2"	**ZBBP632794**	*

***Ver precios en p. 40 (CONEXIONES)** / **See prices in p.40 (FITTINGS)* / *Prix à la p.40 (EMBOUTS) / **Vedere prezzi p.40 (RACCORDI)*

Brida entera pasante

SAE Flange

Bride monobloc passage total

Flangia monoblocco SAE

SERIE SERIES	Ø INT. Ø INNER	TAMAÑO SIZE	Referencia Part n°	€
3000 PSI	30.2	1/2"	**ZBBE308302**	*
3000 PSI	38.1	3/4"	**ZBBE312381**	*
3000 PSI	44.5	1"	**ZBBE316445**	*
3000 PSI	50.8	1"1/4	**ZBBE320508**	*
3000 PSI	60.3	1"1/2	**ZBBE324603**	*
3000 PSI	71.4	2"	**ZBBE332714**	*
3000 PSI	41	2" 1/2	**ZBBE340841**	*
3000 PSI	102.4	3"	**ZBBE3481024**	*
3000 PSI	127	4"	**ZBBE364127**	*
6000 PSI	31.8	1/2"	**ZBBE608318**	*
6000 PSI	41.3	3/4"	**ZBBE612413**	*
6000 PSI	47.6	1"	**ZBBE616476**	*
6000 PSI	54	1"1/4	**ZBBE620540**	*
6000 PSI	63.5	1"1/2	**ZBBE624635**	*
6000 PSI	79.4	2"	**ZBBE632794**	*

***Ver precios en p. 40 (CONEXIONES)** / **See prices in p.40 (FITTINGS)* / *Prix à la p.40 (EMBOUTS) / **Vedere prezzi p.40 (RACCORDI)*

Contrabrida roscada

SAE counter-flange

Contre-bride passage total

Controflangia SAE

SERIE SERIES	Ø INT. Ø INNER	TAMAÑO SIZE	Referencia Part n°	€
3000 PSI	30,2	1/2"	**ZBCE308302**	-
3000 PSI	38,1	3/4"	**ZBCE312381**	-
3000 PSI	44,5	1"	**ZBCE316445**	-
3000 PSI	50,8	1"1/4	**ZBCE320508**	-
3000 PSI	60,3	1"1/2	**ZBCE324603**	-
3000 PSI	71,4	2"	**ZBCE332714**	-
6000 PSI	31,8	1/2"	**ZBCE608318**	-
6000 PSI	41,3	3/4"	**ZBCE612413**	-
6000 PSI	47,6	1"	**ZBCE616476**	-
6000 PSI	54	1"1/4	**ZBCE620540**	-
6000 PSI	63,5	1"1/2	**ZBCE624635**	-
6000 PSI	79,4	2"	**ZBCE632794**	-

***Consultar /** On request **/ Sur demande /** Su richiesta

Bridas SAE

SAE Flanges
Brides SAE
Flange SAE

Brida roscada hembra BSP

BSP Female threaded flange

Bride taraudée femelle BSP

Flangia filettata femmina BSP

SERIE SERIES	ROSCA THREAD	TAMAÑO SIZE	Referencia Part n°	€
3000 PSI	1/2" BSP	1/2"	**ZBBRG30808**	-
3000 PSI	3/4" BSP	3/4"	**ZBBRG31212**	-
3000 PSI	1" BSP	1"	**ZBBRG31616**	-
3000 PSI	1"1/4 BSP	1"1/4	**ZBBRG32020**	-
3000 PSI	1"1/2 BSP	1"1/2	**ZBBRG32424**	-
3000 PSI	2" BSP	2"	**ZBBRG33232**	-
3000 PSI	2"1/2 BSP	2"1/2	**ZBBRG34040**	-
3000 PSI	3" BSP	3"	**ZBBRG34848**	-
3000 PSI	3"1/2 BSP	3"1/2	**ZBBRG35656**	-
3000 PSI	4" BSP	4"	**ZBBRG36464**	-
6000 PSI	1/2" BSP	1/2"	**ZBBRG60808**	-
6000 PSI	3/4" BSP	3/4"	**ZBBRG61212**	-
6000 PSI	1" BSP	1"	**ZBBRG61616**	-
6000 PSI	1"1/4 BSP	1"1/4	**ZBBRG62020**	-
6000 PSI	1"1/2 BSP	1"1/2	**ZBBRG62424**	-
6000 PSI	2" BSP	2"	**ZBBRG63232**	-

Brida codo 90° roscada hembra BSP

90° BSP female threaded flange

Bride 90° taraudée femelle BSP

Flangia a 90° filettata femmina BSP

SERIE SERIES	ROSCA THREAD	TAMAÑO SIZE	Referencia Part n°	€
3000 PSI	1/2" BSP	1/2"	**ZB90RG30808**	-
3000 PSI	3/4" BSP	3/4"	**ZB90RG31212**	-
3000 PSI	1" BSP	1"	**ZB90RG31616**	-
3000 PSI	1"1/4 BSP	1"1/4	**ZB90RG32020**	-
3000 PSI	1"1/2 BSP	1"1/2	**ZB90RG32424**	-
3000 PSI	2" BSP	2"	**ZB90RG33232**	-
6000 PSI	1/2" BSP	1/2"	**ZB90RG60808**	-
6000 PSI	3/4" BSP	3/4"	**ZB90RG61212**	-
6000 PSI	1" BSP	1"	**ZB90RG61616**	-
6000 PSI	1"1/4 BSP	1"1/4	**ZB90RG62020**	-
6000 PSI	1"1/2 BSP	1"1/2	**ZB90RG62424**	-

Contrabrida roscada hembra BSP

BSP Female threaded counter-flange

Contre-bride taraudée femelle BSP

Controflangia filettata femmina BSP

SERIE SERIES	ROSCA THREAD	TAMAÑO SIZE	Referencia Part n°	€
3000 PSI	1/2" BSP	1/2"	**ZBCRG30808**	-
3000 PSI	3/4" BSP	3/4"	**ZBCRG31212**	-
3000 PSI	1" BSP	1"	**ZBCRG31616**	-
3000 PSI	1"1/4 BSP	1"1/4	**ZBCRG32020**	-
3000 PSI	1"1/2 BSP	1"1/2	**ZBCRG32424**	-
3000 PSI	2" BSP	2"	**ZBCRG33232**	-
3000 PSI	2"1/2 BSP	2"1/2	**ZBCRG34040**	-
3000 PSI	3" BSP	3"	**ZBCRG34848**	-
3000 PSI	3"1/2 BSP	3"1/2	**ZBCRG35656**	-
3000 PSI	4" BSP	4"	**ZBCRG36464**	-
6000 PSI	1/2" BSP	1/2"	**ZBCRG60808**	-
6000 PSI	3/4" BSP	3/4"	**ZBCRG61212**	-
6000 PSI	1" BSP	1"	**ZBCRG61616**	-
6000 PSI	1"1/4 BSP	1"1/4	**ZBCRG62020**	-
6000 PSI	1"1/2 BSP	1"1/2	**ZBCRG62424**	-
6000 PSI	2" BSP	2"	**ZBCRG63232**	-

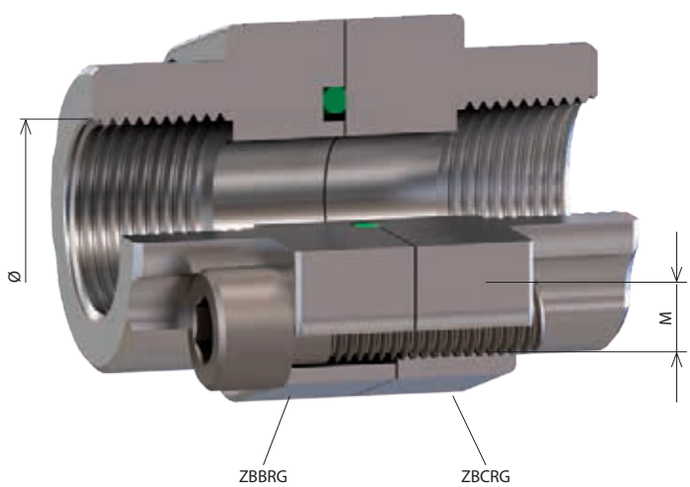

Bridas SAE

SAE Flanges
Brides SAE
Flange SAE

Brida soldable hembra tubo gas

Welding female flange for gas tube

Bride à souder femelle tube gaz

Flangia a saldare di tasca per tubo gas

SERIE SERIES	Ø INT. Ø INNER	TAMAÑO SIZE	Referencia Part n°	€
3000 PSI	21.6	1/2"	**ZBBSG308216**	-
3000 PSI	27.2	3/4"	**ZBBSG312272**	-
3000 PSI	34.0	1"	**ZBBSG316340**	-
3000 PSI	42.8	1"1/4	**ZBBSG320428**	-
3000 PSI	48.6	1"1/2	**ZBBSG324486**	-
3000 PSI	61.0	2"	**ZBBSG332610**	-
3000 PSI	76.6	2"1/2	**ZBBSG340766**	-
3000 PSI	90.5	3"	**ZBBSG348905**	-
3000 PSI	103.0	3"1/2	**ZBBSG3561030**	-
3000 PSI	115.5	4"	**ZBBSG3641155**	-
6000 PSI	21.6	1/2"	**ZBBSG608216**	-
6000 PSI	27.2	3/4"	**ZBBSG612272**	-
6000 PSI	34.0	1"	**ZBBSG616340**	-
6000 PSI	42.8	1"1/4	**ZBBSG620428**	-
6000 PSI	48.6	1"1/2	**ZBBSG624486**	-
6000 PSI	61.0	2"	**ZBBSG632610**	-

Brida codo 90° soldable hembra tubo gas

90° welding female flange for gas tube

Bride 90° à souder femelle tube gaz

Flangia 90° a saldare di tasca per tubo gas

SERIE SERIES	Ø INT. Ø INNER	TAMAÑO SIZE	Referencia Part n°	€
3000 PSI	21.6	1/2"	**ZB90SG308216**	-
3000 PSI	27.2	3/4"	**ZB90SG312272**	-
3000 PSI	34.0	1"	**ZB90SG316340**	-
3000 PSI	42.8	1"1/4	**ZB90SG320428**	-
3000 PSI	48.6	1"1/2	**ZB90SG324486**	-
3000 PSI	61.0	2"	**ZB90SG332610**	-
6000 PSI	21.6	1/2"	**ZB90SG608216**	-
6000 PSI	27.2	3/4"	**ZB90SG612272**	-
6000 PSI	34.0	1"	**ZB90SG616340**	-
6000 PSI	42.8	1"1/4	**ZB90SG620428**	-
6000 PSI	48.6	1"1/2	**ZB90SG624486**	-

Contrabrida soldable hembra tubo gas

Welding female counter-flange for gas tube

Contre-bride à souder femelle tube gaz

Controflangia a saldare di tasca per tubo gas

SERIE SERIES	Ø INT. Ø INNER	TAMAÑO SIZE	Referencia Part n°	€
3000 PSI	21.6	1/2"	**ZBCSG308216**	-
3000 PSI	27.2	3/4"	**ZBCSG312272**	-
3000 PSI	34.0	1"	**ZBCSG316340**	-
3000 PSI	42.8	1"1/4	**ZBCSG320428**	-
3000 PSI	48.6	1"1/2	**ZBCSG324486**	-
3000 PSI	61.0	2"	**ZBCSG332610**	-
3000 PSI	76.6	2"1/2	**ZBCSG340766**	-
3000 PSI	90.5	3"	**ZBCSG348905**	-
3000 PSI	103.0	3"1/2	**ZBCSG3561030**	-
3000 PSI	115.5	4"	**ZBCSG3641155**	-
6000 PSI	21.6	1/2"	**ZBCSG608216**	-
6000 PSI	27.2	3/4"	**ZBCSG612272**	-
6000 PSI	34.0	1"	**ZBCSG616340**	-
6000 PSI	42.8	1"1/4	**ZBCSG620428**	-
6000 PSI	48.6	1"1/2	**ZBCSG624486**	-
6000 PSI	61.0	2"	**ZBCSG632610**	-

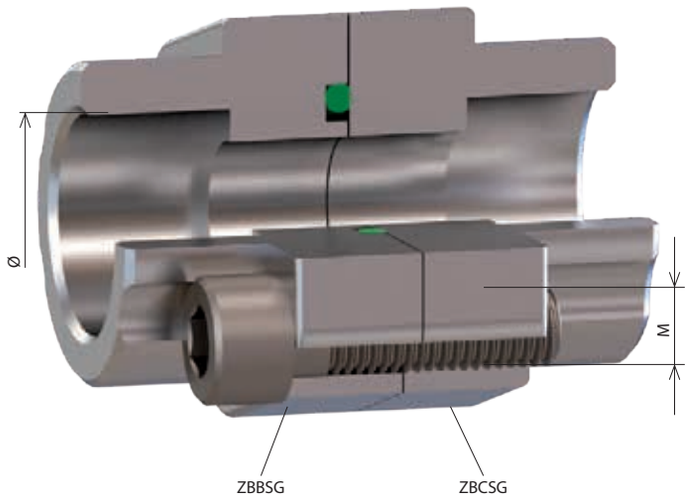

Bridas SAE

SAE Flanges
Brides SAE
Flange SAE

Brida soldable hembra tubo métrico

Female welding flange for metric tube

Bride à souder femelle tube métrique

Flangia a saldare di tasca per tubo metrico

SERIE SERIES	Ø INT. Ø INNER	TAMAÑO SIZE	Referencia Part n°	€
3000 PSI	20.3	1/2"	**ZBBSM308203**	-
3000 PSI	25.3	3/4"	**ZBBSM312253**	-
3000 PSI	30.3	1"	**ZBBSM316303**	-
3000 PSI	38.3	1"1/4	**ZBBSM320383**	-
3000 PSI	50.5	1"1/2	**ZBBSM324505**	-
6000 PSI	20.3	1/2"	**ZBBSM608203**	-
6000 PSI	25.3	3/4"	**ZBBSM612253**	-
6000 PSI	30.3	1"	**ZBBSM616303**	-
6000 PSI	38.3	1"1/4	**ZBBSM620383**	-
6000 PSI	50.5	1"1/2	**ZBBSM624505**	-

Contrabrida soldable hembra tubo métrico

Female welding counter-flange for metric tube

Contre-bride à souder femelle tube métrique

Controflangia a saldare di tasca per tubo metrico

SERIE SERIES	Ø INT. Ø INNER	TAMAÑO SIZE	Referencia Part n°	€
3000 PSI	20.3	1/2"	**ZBCSM308203**	-
3000 PSI	25.3	3/4"	**ZBCSM312253**	-
3000 PSI	30.3	1"	**ZBCSM316303**	-
3000 PSI	38.3	1"1/4	**ZBCSM320383**	-
3000 PSI	50.5	1"1/2	**ZBCSM324505**	-
6000 PSI	20.3	1/2"	**ZBCSM608203**	-
6000 PSI	25.3	3/4"	**ZBCSM612253**	-
6000 PSI	30.3	1"	**ZBCSM616303**	-
6000 PSI	38.3	1"1/4	**ZBCSM620383**	-
6000 PSI	50.5	1"1/2	**ZBCSM624505**	-

Brida codo 90° soldable Hembra tubo métrico

90° female welding flange for metric tube

Bride 90° à souder femelle tube métrique

Flangia 90° a saldare di tasca per tubo metrico

SERIE SERIES	Ø INT. Ø INNER	TAMAÑO SIZE	Referencia Part n°	€
3000 PSI	20.3	1/2"	**ZB90SM308203**	-
3000 PSI	25.3	3/4"	**ZB90SM312253**	-
3000 PSI	30.3	1"	**ZB90SM316303**	-
3000 PSI	38.3	1"1/4	**ZB90SM320383**	-
3000 PSI	50.5	1"1/2	**ZB90SM324505**	-
6000 PSI	20.3	1/2"	**ZB90SM608203**	-
6000 PSI	25.3	3/4"	**ZB90SM612253**	-
6000 PSI	30.3	1"	**ZB90SM616303**	-
6000 PSI	38.3	1"1/4	**ZB90SM620383**	-
6000 PSI	50.5	1"1/2	**ZB90SM624505**	-

BRIDAS SOLDABLES MACHO

Male welding flanges
Brides à souder mâle
Flangia a saldare maschio

Brida soldable macho tubo gas

Male welding flange for gas tube
Bride à souder mâle tube gaz
Flangia a saldare maschio tubo gas

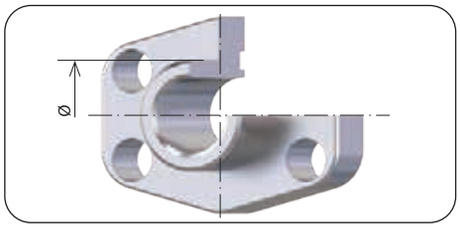

Ref: ZBMSG

Contrabrida macho soldable tubo gas

Male welding counterflange for gas tube
Contre-bride à souder mâle tube gaz
Controflangia a saldare maschio tubo gas

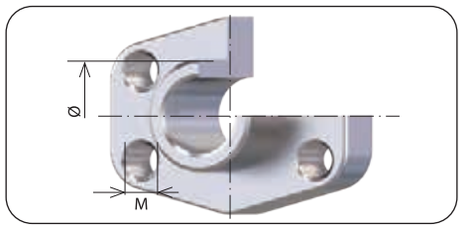

Ref: ZBCMSG

Brida soldable macho tubo métrico

Male welding flange for metric tube
Bride à souder mâle tube métrique
Flangia a saldare maschio tubo metrico

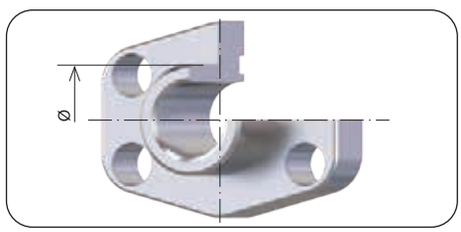

Ref: ZBMSM

Contrabrida macho soldable tubo métrico

Male welding counterflange for metric tube
Contre-bride à souder mâle tube métrique
Controflangia a saldare maschio tubo metrico

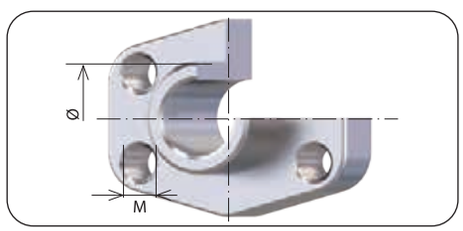

Ref: ZBCMSM

Bridas SAE

SAE Flanges
Brides SAE
Flange SAE

Bridas ciegas

Blind flanges

Brides avec obturateur fermé

Flangia cieca

SERIE SERIES	TAMAÑO SIZE	Referencia Part n°	€
3000 PSI	1/2"	**ZBBC308**	-
3000 PSI	3/4"	**ZBBC312**	-
3000 PSI	1"	**ZBBC316**	-
3000 PSI	1"1/4	**ZBBC320**	-
3000 PSI	1"1/2	**ZBBC324**	-
3000 PSI	2"	**ZBBC332**	-
3000 PSI	2"1/2	**ZBBC340**	-
3000 PSI	3"	**ZBBC348**	-
3000 PSI	3"1/2	**ZBBC356**	-
3000 PSI	4"	**ZBBC364**	-
6000 PSI	1/2"	**ZBBC608**	-
6000 PSI	3/4"	**ZBBC612**	-
6000 PSI	1"	**ZBBC616**	-
6000 PSI	1"1/4	**ZBBC620**	-
6000 PSI	1"1/2	**ZBBC624**	-
6000 PSI	2"	**ZBBC632**	-

Contrabridas ciegas

Blind counter-flanges

Contre-brides avec obturateur fermé

Controflangia cieca

SERIE SERIES	TAMAÑO SIZE	Referencia Part n°	€
3000 PSI	1/2"	**ZBCC308**	-
3000 PSI	3/4"	**ZBCC312**	-
3000 PSI	1"	**ZBCC316**	-
3000 PSI	1"1/4	**ZBCC320**	-
3000 PSI	1"1/2	**ZBCC324**	-
3000 PSI	2"	**ZBCC332**	-
3000 PSI	3"	**ZBCC348**	-
3000 PSI	3"1/2	**ZBCC356**	-
3000 PSI	4"	**ZBCC364**	-
6000 PSI	1/2"	**ZBCC608**	-
6000 PSI	3/4"	**ZBCC612**	-
6000 PSI	1"	**ZBCC616**	-
6000 PSI	1"1/4	**ZBCC620**	-
6000 PSI	1"1/2	**ZBCC624**	-
6000 PSI	2"	**ZBCC632**	-

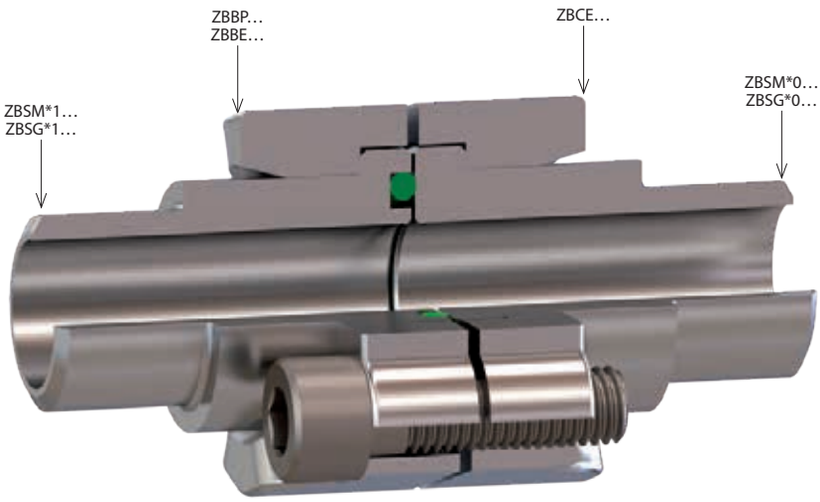

Bridas SAE

SAE Flanges
Brides SAE
Flange SAE

Brida cono soldable tubo métrico

Flange welding adaptor for metric tube

Bride collet à souder tube métrique

Adattatore a saldare per tubo Metrico con o'ring

SERIE SERIES	Ø EXT. Ø OUTER	TAMAÑO SIZE	Referencia Part n°	€
3000 PSI	16	1/2"	**ZBSM3108016**	-
3000 PSI	25	3/4"	**ZBSM3112025**	-
3000 PSI	30	1"	**ZBSM3116030**	-
3000 PSI	38	1"1/4	**ZBSM3120038**	-
3000 PSI	45	1"1/2	**ZBSM3124045**	-
3000 PSI	60	2"	**ZBSM3132060**	-
3000 PSI	70	2"1/2	**ZBSM3140070**	-
3000 PSI	80	3"	**ZBSM3148080**	-
3000 PSI	100	3"1/2	**ZBSM3156100**	-
3000 PSI	114.3	4"	**ZBSM3164114**	-
6000 PSI	16	1/2"	**ZBSM6108016**	-
6000 PSI	25	3/4"	**ZBSM6112025**	-
6000 PSI	30	1"	**ZBSM6116030**	-
6000 PSI	38	1"1/4	**ZBSM6120038**	-
6000 PSI	45	1"1/2	**ZBSM6124045**	-
6000 PSI	60	2"	**ZBSM6132060**	-

Brida cono soldable tubo gas

Flange welding adaptor for gas tube

Bride collet à souder tube gaz

Adattatore a saldare per tubo gas con o'ring

SERIE SERIES	Ø INT. Ø INNER	TAMAÑO SIZE	Referencia Part n°	€
3000 PSI	21.5	1/2"	**ZBSG3108215**	-
3000 PSI	28.0	3/4"	**ZBSG3112280**	-
3000 PSI	34.0	1"	**ZBSG3116340**	-
3000 PSI	42.8	1"1/4	**ZBSG3120428**	-
3000 PSI	48.6	1"1/2	**ZBSG3124486**	-
3000 PSI	61.0	2"	**ZBSG3132610**	-
6000 PSI	21.5	1/2"	**ZBSG6108215**	-
6000 PSI	28.0	3/4"	**ZBSG6112280**	-
6000 PSI	34.0	1"	**ZBSG6116340**	-
6000 PSI	42.8	1"1/4	**ZBSG6120428**	-
6000 PSI	48.6	1"1/2	**ZBSG6124486**	-
6000 PSI	61.0	2"	**ZBSG6132610**	-

Contrabrida cono soldable tubo métrico

Counter-flange welding adaptor for metric tube

Contre-bride collet à souder tube métrique

Adattatore a saldare per tubo Metrico senza o'ring

SERIE SERIES	Ø EXT. Ø OUTER	TAMAÑO SIZE	Referencia Part n°	€
3000 PSI	16	1/2"	**ZBSM3008016**	-
3000 PSI	25	3/4"	**ZBSM3012025**	-
3000 PSI	30	1"	**ZBSM3016030**	-
3000 PSI	38	1"1/4	**ZBSM3020038**	-
3000 PSI	45	1"1/2	**ZBSM3024045**	-
3000 PSI	60	2"	**ZBSM3032060**	-
3000 PSI	70	2"1/2	**ZBSM3040070**	-
3000 PSI	80	3"	**ZBSM3048080**	-
3000 PSI	100	3"1/2	**ZBSM3056100**	-
6000 PSI	16	1/2"	**ZBSM6008016**	-
6000 PSI	25	3/4"	**ZBSM6012025**	-
6000 PSI	30	1"	**ZBSM6016030**	-
6000 PSI	38	1"1/4	**ZBSM6020038**	-
6000 PSI	45	1"1/2	**ZBSM6024045**	-
6000 PSI	60	2"	**ZBSM6032060**	-

Contrabrida cono soldable tubo gas

Counter-flange welding adaptor for gas tube

Contre-bride collet à souder tube gaz

Adattatore a saldare per tubo gas senza o'ring

SERIE SERIES	Ø INT. Ø INNER	TAMAÑO SIZE	Referencia Part n°	€
3000 PSI	21.5	1/2"	**ZBSG3008215**	-
3000 PSI	28.0	3/4"	**ZBSG3012280**	-
3000 PSI	34.0	1"	**ZBSG3016340**	-
3000 PSI	42.8	1"1/4	**ZBSG3020428**	-
3000 PSI	48.6	1"1/2	**ZBSG3024486**	-
3000 PSI	61.0	2"	**ZBSG3032610**	-
6000 PSI	21.5	1/2"	**ZBSG6008215**	-
6000 PSI	28.0	3/4"	**ZBSG6012280**	-
6000 PSI	34.0	1"	**ZBSG6016340**	-
6000 PSI	42.8	1"1/4	**ZBSG6020428**	-
6000 PSI	48.6	1"1/2	**ZBSG6024486**	-
6000 PSI	61.0	2"	**ZBSG6032610**	-

Cabeza brida soldable SW tubo métrico

Welding flange head SW metric tube

Tête de bride de soudage SW tube métrique

Flangia a saldare di testa per tubo metrico SW

SERIE SERIES	TUBO PIPE	TAMAÑO	Referencia Part n°	€
3000 PSI	14	1/2"	**ZBSWM3108014**	-
3000 PSI	22	3/4"	**ZBSWM3112022**	-
3000 PSI	50	2"	**ZBSWM3132050**	-
6000 PSI	22	3/4"	**ZBSWM6112022**	-
6000 PSI	28	1"	**ZBSWM6116028**	-
6000 PSI	35	1"1/4	**ZBSWM6120035**	-
6000 PSI	39	1"1/2	**ZBSWM6124039**	-

Hasta fin de existencias / *Until end of stock* / Jusqu´à la fin du stock / *Fino ad esaurimento*

Bridas SAE

SAE Flanges
Brides SAE
Flange SAE

Tornillos para bridas SAE

Screws for SAE flanges

Vis pour brides SAE

Vite per flangia SAE

ROSCA THREAD	TAMAÑO SIZE	Referencia Part n°	€
M8X30	3000-6000 PSI 1/2"	**ZTB8X30**	-
M10X35	3000 PSI 3/4"-1"	**ZTB10X35**	-
M10X40	3000 PSI 1" 1/4 - 6000 PSI 3/4"	**ZTB10X40**	-
M12X45	3000 PSI 1"1/2-2"-2"1/2-6000 PSI 1"	**ZTB12X45**	-
M14X45	6000 PSI 1"1/4	**ZTB14X45**	-
M16X50	3000 PSI 3"-3"1/2"-4"- 6000 PSI 1" 1/2	**ZTB16X50**	-
M20X70	6000 PSI 2"	**ZTB20X70**	-

Juntas para bridas SAE 3000/6000 PSI

Seals for 3000/6000 PSI flange

Joints pour bride série 3000/6000

Guarnizioni per flangia SAE 3000/6000 PSI

TAMAÑO SIZE	Ø INT. Ø INNER	Ø EXT. Ø OUTER	Referencia Part n°	€
1/2"	17.02	25.40	**JBR08**	*
3/4"	23.36	31.72	**JBR12**	*
1"	31.24	39.62	**JBR16**	*
1"1/4	36.07	44.45	**JBR20**	*
1"1/2	45.34	53.98	**JBR24**	*
2"	54.86	63.50	**JBR32**	*

***Ver precios en Conducciones Hidráulicas y Neumáticas** / **See prices in Hydraulic and Pneumatic Connectors' Catalogue* / *Voir prix dans le Catalogue Connectique Hydraulique et Pneumatique / **Vedere prezzi nel listino Condutture Idrauliche e Pneumatiche*

Juntas tóricas para bridas SAE 3000/6000 PSI

O´rings for 3000/6000 PSI flange

O´rings pour bride série 3000/6000 PSI

O´rings per flangia SAE 3000/6000 PSI

TAMAÑO SIZE	Ø INT. Ø INNER	Referencia Part n°	€
1/2"	18.64	**18.64X3.53**	*
3/4"	24.99	**24.99X3.53**	*
1"	32.92	**32.92X3.53**	*
1"1/4	37.70	**37.70X3.53**	*
1"1/2	47.22	**47.22X3.53**	*
2"	56.74	**56.74X3.53**	*

***Ver precios en Conducciones Hidráulicas y Neumáticas** / **See prices in Hydraulic and Pneumatic Connectors' Catalogue* / *Voir prix dans le Catalogue Connectique Hydraulique et Pneumatique / **Vedere prezzi nel listino Condutture Idrauliche e Pneumatiche*

Abrazaderas

Clamps
Colliers
Collari fissatubo

Abrazadera ligera simple completa

Light serie simple clamp

Collier de fixation simple complet, série légère

Collare verde singolo completo (serie leggera)

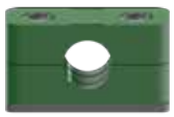

DN	GRUPO GROUP	Referencia Part n°	€
6	1	ZA40AZ06	-
8	1	ZA40AZ08	-
10	1	ZA40AZ10	-
12	1	ZA40AZ12	-
14	2	ZA40AZ14	-
15	2	ZA40AZ15	-
16	2	ZA40AZ16	-
18	2	ZA40AZ18	-
20	3	ZA40AZ20	-
22	3	ZA40AZ22	-
23	3	ZA40AZ23	-
25	3	ZA40AZ25	-
28	4	ZA40AZ28	-
30	4	ZA40AZ30	-
38	5	ZA40AZ38	-
40	5	ZA40AZ40	-
42-1"1/4	5	ZA40AZ42	-

Abrazadera ligera simple completa, plásticos perfil liso

Light serie simple clamp, plastic smooth profile

Collier de fixation simple série légère, complet, plastic profil lisse

Collare verde liscio singolo completo

DN	GRUPO GROUP	Referencia Part n°	€
8	1	ZA40AZ08PL	-
10	1	ZA40AZ10PL	-
12	1	ZA40AZ12PL	-
1/4"	2	ZA40AZ13.2PL	-
15	2	ZA40AZ15PL	-
3/8"	2	ZA40AZ16.7PL	-
18	2	ZA40AZ18PL	-
20	3	ZA40AZ20PL	-
1/2"	3	ZA40AZ21.3PL	-
22	3	ZA40AZ22PL	-
25	3	ZA40AZ25PL	-
3/4"	4	ZA40AZ26.7PL	-
28	4	ZA40AZ28PL	-
30	4	ZA40AZ30PL	-
1"	5	ZA40AZ33.3PL	-
35	5	ZA40AZ35PL	-
38	5	ZA40AZ38PL	-
42-1" 1/4	5	ZA40AZ42PL	-

Abrazadera ligera reforzada completa

Light serie reinforced clamp

Collier de fixation simple série légère renforcé complet

Collare verde singolo completo (serie leggera rinforzata)

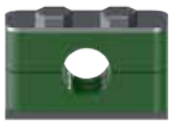

DN	GRUPO GROUP	Referencia Part n°	€
6	1	ZA41AZ06	-
8	1	ZA41AZ08	-
10	1	ZA41AZ10	-
12	1	ZA41AZ12	-
1/4"	2	ZA41AZ13.2	-
14	2	ZA41AZ14	-
15	2	ZA41AZ15	-
16	2	ZA41AZ16	-
18	2	ZA41AZ18	-
20	3	ZA41AZ20	-
22	3	ZA41AZ22	-
23	3	ZA41AZ23	-
25	3	ZA41AZ25	-
28	4	ZA41AZ28	-
30	4	ZA41AZ30	-
38	5	ZA41AZ38	-
40	5	ZA41AZ40	-
42-1"1/4	5	ZA41AZ42	-

Abrazadera ligera reforzada completa, plásticos perfil liso

Light serie reinforced clamp, plastic smooth profile

Collier de fixation simple série légère renforcé, complet, plastic profil lisse

Collare verde liscio singolo completo (serie leggera rinforzata)

DN	GRUPO GROUP	Referencia Part n°	€
8	1	ZA41AZ08PL	-
10	1	ZA41AZ10PL	-
12	1	ZA41AZ12PL	-
1/4"	2	ZA41AZ13.2PL	-
15	2	ZA41AZ15PL	-
3/8"	2	ZA41AZ16.7PL	-
18	2	ZA41AZ18PL	-
20	3	ZA41AZ20PL	-
1/2"	3	ZA41AZ21.3PL	-
22	3	ZA41AZ22PL	-
25	3	ZA41AZ25PL	-
3/4"	4	ZA41AZ26.7PL	-
28	4	ZA41AZ28PL	-
30	4	ZA41AZ30PL	-
1"	5	ZA41AZ33.3PL	-
35	5	ZA41AZ35PL	-
38	5	ZA41AZ38PL	-
42-1" 1/4	5	ZA41AZ42PL	-

Abrazaderas

Clamps
Colliers
Collari fissatubo

Plásticos polipropileno, serie ligera

Plastics polypropylene, light serie

Plastique polypropylene, série légère

Collare singolo polipropilene verde (serie leggera)

DN	GRUPO GROUP	Referencia Part n°	€
6	1	**A106C**	*
8	1	**A108C**	*
10	1	**A110C**	*
12	1	**A112C**	*
1/4"	2	**A213.2C**	*
14	2	**A214C**	*
15	2	**A215C**	*
3/8"	2	**A216.7C**	*
16	2	**A216C**	*
18	2	**A218C**	*
19	3	**A319C**	*
20	3	**A320C**	*
1/2"	3	**A321.3C**	*
22	3	**A322C**	*
23	3	**A323C**	*
25	3	**A325C**	*
3/4"	4	**A426.7C**	*
28	4	**A428C**	*
30	4	**A430C**	*
32	5	**A532C**	*
1"	5	**A533.7C**	*
35	5	**A535C**	*
38	5	**A538C**	*
40	5	**A540C**	*
42-1"1/4	5	**A542C**	*
44.5	6	**A644.5C**	*
1"1/2	6	**A648.3C**	*
50.8	6	**A650.8C**	*

***Precio por pareja. Ver precios en Tarifa Conducciones Hidráulicas y Neumáticas** / **Price per couple. See prices in Hydraulic and Pneumatic Connectors' Catalogue* / *Prix par paire. Voir les prix dans le Catalogue Connectique Hydraulique et Pneumatique / **Prezzo per coppia. Vedere prezzi nel listino Condutture Idrauliche e Pneumatiche*

Chapas inferiores, serie ligera

Lower plate, light serie

Plaque inférieure, série légère

Piastra inferiore (serie leggera)

GRUPO GROUP	Referencia Part n°	€
1	**ZAPIN1**	-
2	**ZAPIN2**	-
3	**ZAPIN3**	-
4	**ZAPIN4**	-
5	**ZAPIN5**	-
6	**ZAPIN6**	-

Chapas superiores, serie ligera

Upper plate, light serie

Plaque supérieure, série légère

Piastra superiore (serie leggera)

GRUPO GROUP	Referencia Part n°	€
1	**ZAPS1**	-
2	**ZAPS2**	-
3	**ZAPS3**	-
4	**ZAPS4**	-
5	**ZAPS5**	-
6	**ZAPS6**	-

Tornillos Allen, serie ligera

Allen screw, light serie

Vis Allen, série légère

Vite Allen

ROSCA THREAD	GRUPO GROUP	Referencia Part n°	€
M6	1	**ZAVTC1**	-
M6	2	**ZAVTC2**	-
M6	3	**ZAVTC3**	-
M6	4	**ZAVTC4**	-
M6	5	**ZAVTC5**	-
M6	6	**ZAVTC6**	-

Precio por unidad / *Price per unit* / Prix à l'unité / *Prezzo unitario*

Tornillos Hexagonales, serie ligera

Hexagonal screw, light serie

Vis Hexagonnel, série légère

Vite esagonale

ROSCA THREAD	GRUPO GROUP	Referencia Part n°	€
M6	1	**ZAVTE1**	-
M6	2	**ZAVTE2**	-
M6	3	**ZAVTE3**	-
M6	4	**ZAVTE4**	-
M6	5	**ZAVTE5**	-
M6	6	**ZAVTE6**	-

Precio por unidad / *Price per unit* / Prix à l'unité / *Prezzo unitario*

Abrazaderas

Clamps
Colliers
Collari fissatubo

Tornillos Apilar Inox Serie Ligera

Stainless Steel Stack Screws Light Series

Vis de pile en acier inoxydable série légère

Vite inox (serie leggera componibile)

ROSCA THREAD	GRUPO GROUP		Referencia Part n°	€
M6	1		ZAVTA1	-
M6	2		ZAVTA2	-
M6	3		ZAVTA3	-
M6	4		ZAVTA4	-
M6	5		ZAVTA5	-
M6	6	NEW	ZAVTA6	-

Chapas para apilar abrazaderas, serie ligera

Plates to pile up clamps, light serie

Plaques pour empiler colliers, série légère

Piastra componibile (serie leggera)

GRUPO GROUP	Referencia Part n°	€
1	ZAPA1	-
2	ZAPA2	-
3	ZAPA3	-
4	ZAPA4	-
5	ZAPA5	-
6	ZAPA6	-

ABRAZADERAS | CLAMPS

UNE TUS SISTEMAS DE TUBERÍA DE FORMA SEGURA

JOIN PIPE SYSTEMS SECURELY

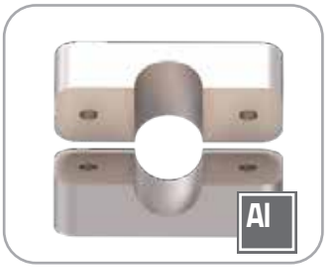

CONSULTA EL CATÁLOGO DE CONDUCCIONES

CHECK OUR CONNECTORS CATALOGUE

Abrazaderas

Clamps
Colliers
Collari fissatubo

Chapa Atornillar, Serie ligera

Elongated Weld Plate Light Series

Plaque à souder allongée, série légère

Piastra inferiore con fori di fissaggio (serie leggera)

GRUPO GROUP	Referencia Part n°	€
1	ZAPT1	-
2	ZAPT2	-
3	ZAPT3	-
4	ZAPT4	-
5	ZAPT5	-
6	ZAPT6	-

Chapa Agrupar Inox Serie Ligera

NEW

Stainless Steel Jointed plate Light Series

Plaque à joindre acier inoxydable série légère

Piastra inferiore multipla (serie leggera)

GRUPO GROUP	N° ABRAZ CLAMP QTY.	Referencia Part n°	€
1	10	ZAPAG1	-
2	10	ZAPAG2	-
3	10	ZAPAG3	-
4	10	ZAPAG4	-
5	10	ZAPAG5	-
6	10	ZAPAG6	-

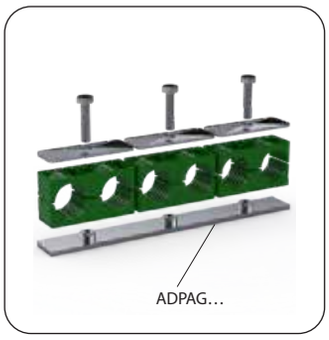

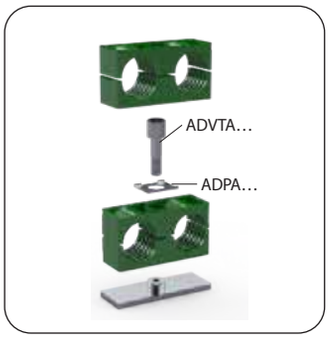

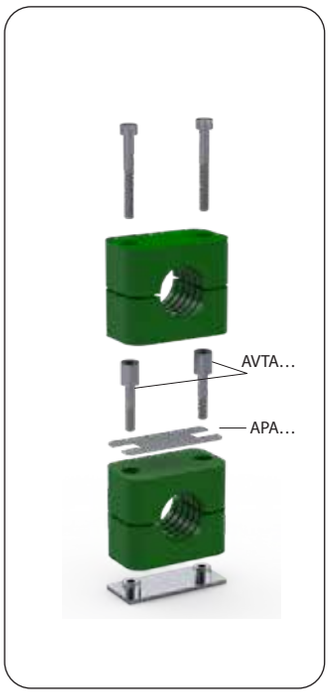

Abrazaderas

Clamps
Colliers
Collari fissatubo

Abrazaderas dobles completas

Double clamp - parallel

Colliers de fixation doubles complets

Collare verde doppio completo

DN	GRUPO GROUP	Referencia Part n°	€
6	1	ZAZCFS06	-
8	1	ZAZCFS08	-
10	1	ZAZCFS10	-
12	1	ZAZCFS12	-
14	2	ZAZCFS14	-
15	2	ZAZCFS15	-
16	2	ZAZCFS16	-
18	2	ZAZCFS18	-
20	3	ZAZCFS20	-
22	3	ZAZCFS22	-
25	3	ZAZCFS25	-
28	4	ZAZCFS28	-
30	4	ZAZCFS30	-
35	5	ZAZCFS35	-
38	5	ZAZCFS38	-
40	5	ZAZCFS40	-
42	5	ZAZCFS42	-

Chapas inferiores

Double Lower plate

Plaques inférieures à souder double

Piastra inferiore (collare doppio)

ROSCA THREAD	GRUPO GROUP	Referencia Part n°	€
M6	1	ZADPIN1	-
M8	2	ZADPIN2	-
M8	3	ZADPIN3	-
M8	4	ZADPIN4	-
M8	5	ZADPIN5	-

Chapas superiores

Double Upper plate

Plaques supérieures de protection double

Piastra superiore (collare doppio)

GRUPO GROUP	Referencia Part n°	€
1	ZADPS1	-
2	ZADPS2	-
3	ZADPS3	-
4	ZADPS4	-
5	ZADPS5	-

Plásticos polipropileno dobles

Double plastics polypropylene

Plastiques polypropylene doubles

Collare doppio polipropilene verde

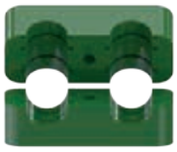

DN	GRUPO GROUP	Referencia Part n°	€
6	1	AD106C	*
8	1	AD108C	*
10	1	AD110C	*
12	1	AD112C	*
1/4"	2	AD213.2C	*
14	2	AD214C	*
15	2	AD215C	*
3/8"	2	AD216.7C	*
16	2	AD216C	*
18	2	AD218C	*
19	3	AD319C	*
20	3	AD320C	*
1/2"	3	AD321.3C	*
22	3	AD322C	*
25	3	AD325C	*
3/4"	4	AD426.7C	*
28	4	AD428C	*
30	4	AD430C	*
32	5	AD532C	*
1"	5	AD533.3C	*
35	5	AD535C	*
38	5	AD538C	*
40	5	AD540C	*
42	5	AD542C	*

***Precio por pareja. Ver precios en Tarifa Conducciones Hidráulicas y Neumáticas** / **Price per couple. See prices in Hydraulic and Pneumatic Connectors' Catalogue* / *Prix par paire. Voir les prix dans le Catalogue Connectique Hydraulique et Pneumatique / **Prezzo per coppia. Vedere prezzi nel listino Condutture Idrauliche e Pneumatiche*

Tornillos cabeza hexagonal

Hexagonal screw

Vis hexagonale

Vite esagonale (collare doppio)

ROSCA THREAD	GRUPO GROUP	Referencia Part n°	€
M6	1	ZADVTE1	-
M8	2	ZADVTE2	-
M8	3	ZADVTE3	-
M8	4	ZADVTE4	-
M8	5	ZADVTE5	-

Precio por unidad / *Price per unit* / Prix à l'unité / *Prezzo unitario*

Abrazaderas

Clamps
Colliers
Collari fissatubo

Chapa apilar abrazadera doble

NEW

Plates to pile up double clamps

Plaques pour empiler colliers doubles

Piastra serie componibile (collare doppio)

GRUPO GROUP	Referencia Part n°	€
1	**ZADPA1**	-
2/3/4/5	**ZADPA2**	-

Tornillo apliar abrazadera doble

NEW

Stack Screws double clamps

Vis de pile colliers doubles

Vite inox (serie componibile collare doppio)

ROSCA THREAD	GRUPO GROUP	Referencia Part n°	€
M6	2	**ZADVTA2**	-
M6	3	**ZADVTA3**	-
M6	4	**ZADVTA4**	-
M6	5	**ZADVTA5**	-
M6	6	**ZADVTA6**	-

Para Grupo 1: ZAVTA1 (ligera) */ For Group 1: ZAVTA1 (Light)* / Pour le Groupe 1: ZAVTA1 (légère) */ Per il Gruppo 1: ZAVTA1 (leggera)*

Chapa agrupar abrazadera doble

NEW

Jointed plate double clamps

Plaque à joindre colliers doubles

Piastra multipla (collare doppio)

ROSCA THREAD	GRUPO GROUP	N° ABRAZADERAS CLAMP QTY.	Referencia Part n°	€
M6	1	5	**ZADPAG1**	-
M8	2	5	**ZADPAG2**	-
M8	3	5	**ZADPAG3**	-

***Consultar** / On request / **Sur demande** / Su richiesta

Abrazaderas

Clamps
Colliers
Collari fissatubo

Abrazaderas Inox Serie pesada completas

Heavy Series Stainless Steel Clamps

Pinces en acier inoxydable série lourde

Collare singolo completo (serie pesante)

DN	GRUPO GROUP	Referencia Part n°	€
6	1	**ZAZCPS06**	-
8	1	**ZAZCPS08**	-
10	1	**ZAZCPS10**	-
12	1	**ZAZCPS12**	-
1/4"	1	**ZAZCPS13.2**	-
14	1	**ZAZCPS14**	-
15	1	**ZAZCPS15**	-
16	1	**ZAZCPS16**	-
3/8"	1	**ZAZCPS17.2**	-
18	1	**ZAZCPS18**	-
20	2	**ZAZCPS20**	-
1/2"	2	**ZAZCPS21.3**	-
22	2	**ZAZCPS22**	-
25	2	**ZAZCPS25**	-
3/4"	2	**ZAZCPS26.7**	-
28	2	**ZAZCPS28**	-
30	2	**ZAZCPS30**	-
32	3	**ZAZCPS32**	-
1"	3	**ZAZCPS33.3**	-
35	3	**ZAZCPS35**	-
38	3	**ZAZCPS38**	-
40	3	**ZAZCPS40**	-
42 - 1" 1/4	3	**ZAZCPS42**	-
45	4	**ZAZCPS45**	-
48-1" 1/2	4	**ZAZCPS48**	-
50	4	**ZAZCPS50**	-
55	4	**ZAZCPS55**	-
2"	4	**ZAZCPS60.3**	-
65	4	**ZAZCPS65**	-
70	4	**ZAZCPS70**	-

Plasticos polipropileno, serie pesada

Plastics polypropylene, heavy serie

Plastique polypropylene, série lourde

Collare singolo polipropilene verde (serie pesante)

DN	GRUPO GROUP	Referencia Part n°	€
6	1	**AMPP106C**	*
8	1	**AMPP108C**	*
10	1	**AMPP110C**	*
12	1	**AMPP112C**	*
1/4"	1	**AMPP113.2C**	*
14	1	**AMPP114C**	*
15	1	**AMPP115C**	*
16	1	**AMPP116C**	*
3/8"	1	**AMPP117.2C**	*
18	1	**AMPP118C**	*
20	2	**AMPP220C**	*
1/2"	2	**AMPP221.3C**	*
22	2	**AMPP222C**	*
25	2	**AMPP225C**	*
3/4"	2	**AMPP226.7C**	*
28	2	**AMPP228C**	*
30	2	**AMPP230C**	*
30	3	**AMPP330C**	*
32	3	**AMPP332C**	*
1"	3	**AMPP333.3C**	*
35	3	**AMPP335C**	*
38	3	**AMPP338C**	*
40	3	**AMPP340C**	*
42	3	**AMPP342C**	*
38	4	**AMPP438C**	*
42- 1" 1/4	4	**AMPP442C**	*
45	4	**AMPP445C**	*
48-1" 1/2	4	**AMPP448C**	*
50	4	**AMPP450C**	*
55	4	**AMPP455C**	*
2"	4	**AMPP460.3C**	*
65	4	**AMPP465C**	*
70	4	**AMPP470C**	*

***Precio por pareja. Ver precios en Tarifa Conducciones Hidráulicas y Neumáticas** */ *Price per couple. See prices in Hydraulic and Pneumatic Connectors' Catalogue /* *Prix par paire. Voir les prix dans le Catalogue Connectique Hydraulique et Pneumatique */ *Prezzo per coppia. Vedere prezzi nel listino Condutture Idrauliche e Pneumatiche*

Abrazaderas

Clamps
Colliers
Collari fissatubo

Chapas inferiores, serie pesada

Lower plate, heavy serie

Plaque inférieure, série lourde

Piastra inferiore (serie pesante)

ROSCA THREAD	GRUPO GROUP	Referencia Part n°	€
M10	1	**ZAPINP1**	-
M10	2	**ZAPINP2**	-
M10	3	**ZAPINP3**	-
M12	4	**ZAPINP4**	-

Chapas superiores, serie pesada

Upper plate, heavy serie

Plaque supérieure, série lourde

Piastra superiore (serie pesante)

GRUPO GROUP	Referencia Part n°	€
1	**ZAPSP1**	-
2	**ZAPSP2**	-
3	**ZAPSP3**	-
4	**ZAPSP4**	-

Tornillos, serie pesada

Screw, heavy serie

Vis, série lourde

Vite (serie pesante)

ROSCA THREAD	GRUPO GROUP	Referencia Part n°	€
M10	1	**ZAVTEP1**	-
M10	2	**ZAVTEP2**	-
M10	3	**ZAVTEP3**	-
M12	4	**ZAVTEP4**	-

Precio por unidad / *Price per unit* / Prix à l'unité / *Prezzo unitario*

Tornillo apilar serie pesada

NEW

Stack Screws, heavy serie

Vis de pile, série lourde

Vite Inox (serie pesante componibile)

ROSCA THREAD	GRUPO GROUP	Referencia Part n°	€
M10	1	**ZAPVTAP1**	-
M10	2	**ZAPVTAP2**	-
M10	3	**ZAPVTAP3**	-
M12	4	**ZAPVTAP4**	-

Chapa apilar serie pesada

NEW

Plates to pile up clamps, heavy serie

Plaques pour empiler colliers, série lourde

Piastra componibile (serie pesante)

GRUPO GROUP	Referencia Part n°	€
1	**ZAPAP1**	-
2	**ZAPAP2**	-
3	**ZAPAP3**	-
4	**ZAPAP4**	-

Accesorios para carril

Rail accessories

Accessoires pour rail

Accessori per binario

ROSCA THREAD	DETALLE DESCRIPTION		Referencia Part n°	€
M6	NUT		**TC6I**	-
M8	NUT		**TC8I**	-
M10	NUT		**TC10I**	-
M12	NUT	NEW	**TC12I**	-
--	RAIL		**TS11I**	-
--	RAIL		**TS14I**	-
--	RAIL	NEW	**TSP22I**	-

***Consultar** / On request / **Sur demande** / Su richiesta

CONSULTA EL CATÁLOGO DE CONDUCCIONES

REQUEST OUR CONNECTORS CATALOGUE

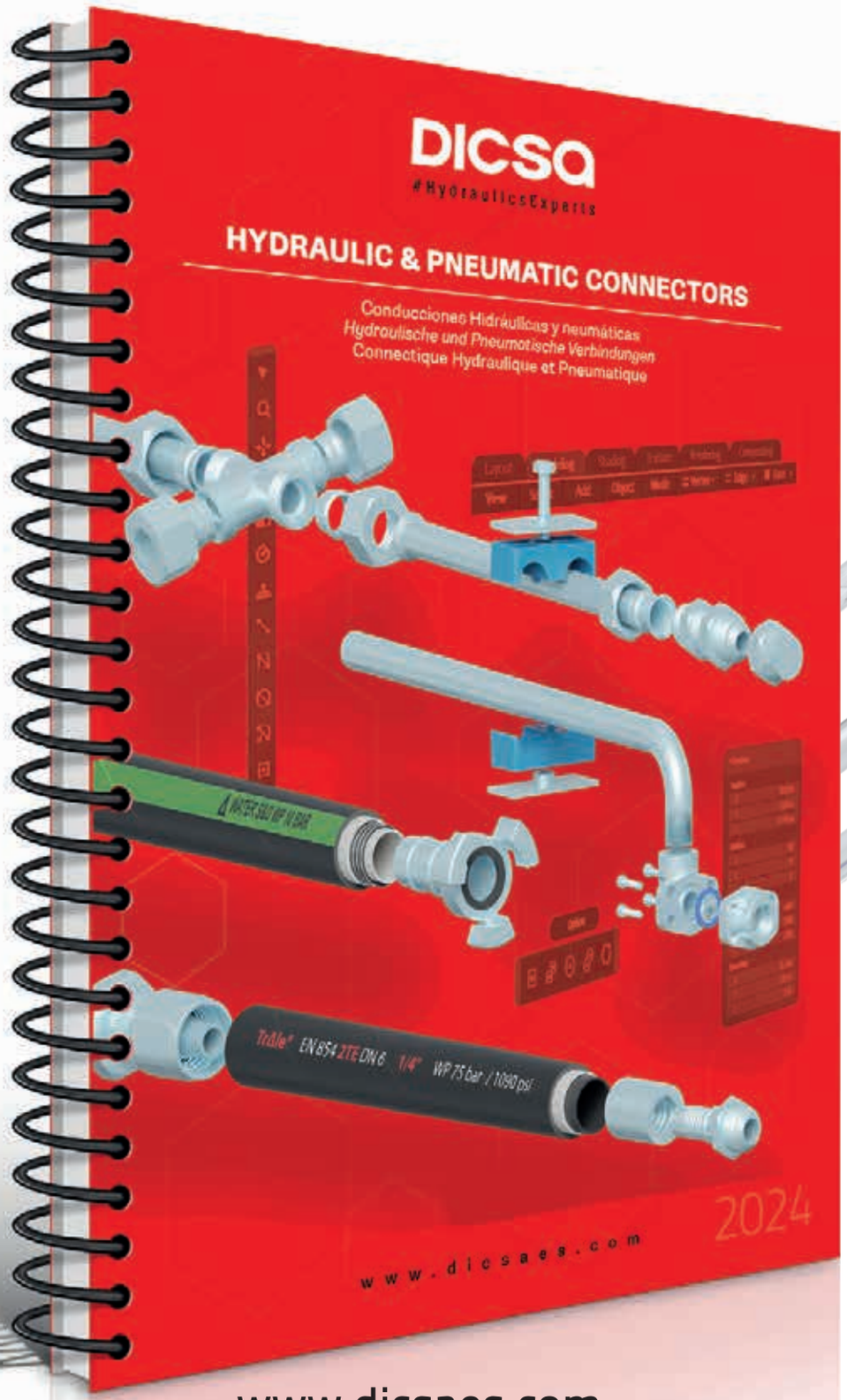

www.dicsaes.com

FLEXIBLES HIDRÁULICOS Δ FLEXIBLE CONNECTORS
FLEXIBLES INDUSTRIALES Δ INDUSTRIAL FLEXIBLE HOSES & FITTINGS
TUBO RÍGIDO Δ PIPE CONNECTORS
ACCESORIOS Δ ACCESSORIES
CONDUCCIONES NEUMÁTICAS Δ PNEUMATIC CONNECTORS

Adaptadores BSP 170
BSP Adaptors
Adapteurs BSP
Adattatori BSP

Adaptadores NPT 180
NPT Adaptors
Adapteurs NPT
Adattatori NPT

Adaptadores O'Ring Boss 185
O'Ring Boss Adaptors
Adapteurs O'Ring Boss
Adattatori O'Ring Boss

Adaptadores ORFS 187
ORFS Adaptors
Adapteurs ORFS
Adattatori ORFS

04

ADAPTADORES

Adaptors

Adapteurs

Adattatori

Adaptadores BSP

BSP Adaptors
Adapteurs BSP
Adattatori BSP

Uniones rectas macho ▪ Straight male adaptors ▪ Unions mâle ▪ Adattatori diritti maschio | 170

Z1010 Z1010_WD Z1011 Z1020 Z1020_WD Z1016 Z1014 Z1024 Z1012 Z1022

Uniones rectas macho-hembra ▪ Adaptors male-female ▪ Unions mâle-femelle ▪ Adattatori diritti maschio-femmina | 172

Z1060 Z1060 Z1061 Z1172 Z1170 Z1173 Z1150

Tapones ▪ Plugs ▪ Bouchons ▪ Tappi | 174

Z1072 Z1070 Z1075

Uniones hembra y pasatabiques ▪ Female adaptors and bulkheads ▪ Unions femelle et passe-cloison ▪ Raccordi femmina e passaparete | 175

Z1310 Z1031 Z1031 Z1160 Z1161

Orientables ▪ Banjos ▪ Adapteurs orientables ▪ Bulloni forati | 176

Z1090 Z1092 Z1140

Juntas metal FKM ▪ Joints ▪ Bague BS ▪ Rondelle Bonded | 176

ZVT210 ZVT320

Codos accesoriales ▪ Elbows ▪ Adapteurs coude accessoriel ▪ Adattatori a 90° e 45° tubolari | 177

Z1194 ZA1196 Z1195 ZA1195

Codos en forja ▪ Forging elbows ▪ Adapteurs coude en forge ▪ Adattatori a 90° e 45° forgiati | 178

Z1190 Z1192 Z1197 Z1191 Z1193 Z1196 Z1198 Z1183

Te y cruces en forja ▪ Forging Tees and croos ▪ Adapteurs Tés en forge et des croix ▪ Adattatori a T forgiati e croce | 179

Z1220 Z1222 Z1224 Z1228 Z1226 Z1221 Z1223 Z1227

Adaptadores NPT

NPT Adaptors
Adapteurs NPT
Adattatori NPT

Uniones rectas macho-macho ▪ Straight male adaptors ▪ Unions mâle ▪ Adattatori diritti maschio - maschio | 180

Z1015

ZN1015

Uniones rectas macho-hembra ▪ Adaptors male-female ▪ Unions mâle-femelle ▪ Adattatori diritti maschio - femmina | 180

ZN1060

ZN1150

ZN1170

ZN1174

Tapones ▪ Plugs ▪ Bouchons ▪ Tappi | 181

ZN1072

ZN1070

ZN1071

Uniones hembra y pasatabiques ▪ Female adaptors and bulkheads ▪ Unions femelle et passe cloisson ▪ Adattatori femmina e passaparete | 181

ZN1031

Codos en forja ▪ Forging elbows ▪ Adapteurs coude en forge ▪ Adattatori a 90° e 45° forgiati | 182

ZN1190

ZN1193

ZN1196

ZN1198

ZN1396

ZN1393

Tes en forja ▪ Forging tees ▪ Adapteurs Té en forge ▪ Adattatori a T forgiati | 183

ZN1220

ZN1226

Adaptadores O'Ring Boss

O'Ring Boss Adaptors
Adapteurs O'Ring Boss
Adattatori O'Ring Boss

Uniones rectas macho ▪ Straight male adaptors ▪ Unions mâle ▪ Unione diritta maschio | 185

ZS6464

ZS220

ZS3474

ZS6401

Uniones rectas macho-hembra ▪ Adaptors male-female ▪ Unions mâle-femelle ▪ Unione diritta maschio-femmina | 185

ZS380

ZS6405

Tapones ▪ Plugs ▪ Bouchons ▪ Tappi | 185

ZS6408

ZS6409

Codos en forja ▪ Forging elbows and tees ▪ Adapteurs coude et té en forge ▪ Curve e T forgiati | 186

ZS575

Tes en forja ▪ Forging Tees ▪ Adapteurs Té en forge ▪ Adattatori a T forgiati | 186

ZS6803

ZS6804

Adaptadores ORFS

ORFS Adaptors
Adapteurs ORFS
Adattatori ORFS

Conos y tuercas ORFS ▪ ORFS Nuts and nipples ▪ Écrous et collets ORFS ▪ Dado e Ogive | 187

ZOR102

ZOR1273

Tapones ▪ Plugs ▪ Bouchons ▪ Tappi | 187

ZOR104

ZOR105

Uniones rectas ORFS ▪ ORFS Straight unions ▪ Unions droites ORFS ▪ Adattatori diritti ORFS | 187

ZOR200

ZOR202

ZOR1017

ZOR106

ZOR301

ZOR204

ZOR302

ZOR305

Codos en forja ORFS ▪ ORFS Elbows ▪ Coudes ORFS ▪ Adattatori a 90° ORFS | 189

ZOR405

ZOR600

Tes en forja ORFS ▪ ORFS Tees ▪ Tés ORFS ▪ Adattatori a T ORFS | 189

ZOR700

ZOR701

ZOR702

JVORFS

Adaptadores BSP

BSP Adaptors
Adapteurs BSP
Adattatori BSP

Adaptador macho - macho BSP cono 60°

Adaptor male BSP 60° - male BSP 60°

Adapteur mâle BSP - mâle BSP cône 60°

Nipples BSP 60°

ROSCA THREAD		Referencia Part n°	€
1/8" BSP	1/8" BSP	**Z101002**	-
1/4" BSP	1/4" BSP	**Z101004**	-
1/4" BSP	1/4" BSP	**Z101004H19**	-
3/8" BSP	3/8" BSP	**Z101006**	-
1/2" BSP	1/2" BSP	**Z101008**	-
5/8" BSP	5/8" BSP	**Z101010**	-
3/4" BSP	3/4" BSP	**Z101012**	-
1" BSP	1" BSP	**Z101016**	-
1"1/4 BSP	1"1/4 BSP	**Z101020**	-
1"1/2 BSP	1"1/2 BSP	**Z101024**	-
2" BSP	2" BSP	**Z101032**	-
2" BSP	2" BSP	**Z101032H70**	-
2"1/2 BSP	2"1/2 BSP	**Z101040**	-
3" BSP	3" BSP	**Z101048**	-

Adaptador macho - macho BSP cono 60° con junta encastrada

Adaptor male BSP 60° - male BSP 60° captive seal

Adapteur mâle BSP - mâle BSP cône 60° avec joint plat

Nipples BSP 60° con guarnizione

ROSCA THREAD		Referencia Part n°	€
1/4" BSP	1/4" BSP	**Z101004WD**	-
3/8" BSP	3/8" BSP	**Z101006WD**	-
1/2" BSP	1/2" BSP	**Z101008WD**	-
3/4" BSP	3/4" BSP	**Z101012WD**	-
1" BSP	1" BSP	**Z101016WD**	-

Adaptador macho - macho BSP asiento plano

Adaptor male BSP - male BSP flat seat

Adapteur mâle BSP - mâle BSP fond plat

Nipples sede piana

ROSCA THREAD		Referencia Part n°	€
1/4" BSP	1/4" BSP	**Z101104**	-
3/8" BSP	3/8" BSP	**Z101106**	-
1/2" BSP	1/2" BSP	**Z101108**	-
3/4" BSP	3/4" BSP	**Z101112**	-
1" BSP	1" BSP	**Z101116**	-
1"1/4 BSP	1"1/4 BSP	**Z101120**	-
1"1/2 BSP	1"1/2 BSP	**Z101124**	-
2" BSP	2" BSP	**Z101132**	-

Reductor macho - macho BSP cono 60°

Reducer male adaptor BSP 60° - male BSP 60°

Réduction mâle BSP - mâle BSP cône 60°

Nipples di riduzione BSP 60°

ROSCA THREAD		Referencia Part n°	€
1/8" BSP	1/4" BSP	**Z10200204**	-
1/8" BSP	1/4" BSP	**Z10200204H19**	-
1/8" BSP	3/8" BSP	**Z10200206**	-
1/8" BSP	1/2" BSP	**Z10200208**	-
1/4" BSP	3/8" BSP	**Z10200406**	-
1/4" BSP	1/2" BSP	**Z10200408**	-
1/4" BSP	3/4" BSP	**Z10200412**	-
3/8" BSP	1/2" BSP	**Z10200608**	-
3/8" BSP	3/4" BSP	**Z10200612**	-
3/8" BSP	1" BSP	**Z10200616**	-
1/2" BSP	3/4" BSP	**Z10200812**	-
1/2" BSP	1" BSP	**Z10200816**	-
1/2" BSP	1"1/4 BSP	**Z10200820***	-
1/2" BSP	1"1/2 BSP	**Z10200824***	-
5/8" BSP	1/2" BSP	**Z10201008**	-
5/8" BSP	3/4" BSP	**Z10201012**	-
3/4" BSP	1" BSP	**Z10201216**	-
3/4" BSP	1"1/4 BSP	**Z10201220**	-
1" BSP	1"1/4 BSP	**Z10201620**	-
1" BSP	1"1/2 BSP	**Z10201624**	-
1"1/4 BSP	1"1/2 BSP	**Z10202024**	-
1"1/4 BSP	2" BSP	**Z10202032**	-
1"1/2 BSP	2" BSP	**Z10202432**	-
1"1/2 BSP	2" BSP	**Z10202432H70**	-
2" BSP	2" 1/2 BSP	**Z10203240**	-
2" BSP	3" BSP	**Z10203248**	-
2"1/2 BSP	3" BSP	**Z10204048**	-

***Hasta fin de existencias** / *Until end of stock* / Jusqu´à la fin du stock / *Fino ad esaurimento*

Reductor macho - macho BSP cono 60° con junta encastrada

Reducer male adaptor BSP 60° - male BSP 60° captive seal

Réduction mâle BSP - mâle BSP cône 60° avec joint plat

Niples di riduzione BSP 60° con guarnizione

ROSCA THREAD		Referencia Part n°	€
1/4" BSP	3/8" BSP	**Z10200406WD**	-
1/4" BSP	1/2" BSP	**Z10200408WD**	-
3/8" BSP	1/2" BSP	**Z10200608WD**	-
1/2" BSP	3/4" BSP	**Z10200812WD**	-
3/4" BSP	1" BSP	**Z10201216WD**	-

Adaptadores BSP

BSP Adaptors
Adapteurs BSP
Adattatori BSP

Adaptador macho - macho BSPT

Adaptor male BSPT - male BSPT

Adapteur mâle gaz conique BSPT - mâle gaz conique BSPT

Nipples conico BSPT

ROSCA THREAD		Referencia Part n°	€
1/4" BSPT	1/8" BSPT	**Z10160402**	-
1/4" BSPT	1/4" BSPT	**Z10160404**	-
1/4" BSPT	3/8" BSPT	**Z10160406**	-
3/8" BSPT	3/8" BSPT	**Z10160606**	-
1/2" BSPT	1/2" BSPT	**Z10160808**	-
3/4" BSPT	3/4" BSPT	**Z10161212**	-
1" BSPT	3/4" BSPT	**Z10161612**	-
1" BSPT	1" BSPT	**Z10161616**	-
1" 1/4 BSPT	1" 1/4 BSPT	**Z10162020**	-
1" 1/2 BSPT	1" 1/2 BSPT	**Z10162424**	-
2" BSPT	2" BSPT	**Z10163232**	-

Adaptador macho BSP 60° - macho NPT

Adaptor male BSP 60° - male NPT

Adapteur mâle BSP cône 60° - mâle BRIGGS (NPT)

Nipples BSP 60° - NPT 60°

ROSCA THREAD		Referencia Part n°	€
1/8" BSP	1/8" NPT	**Z101402**	-
1/4" BSP	1/4" NPT	**Z101404**	-
3/8" BSP	3/8" NPT	**Z101406**	-
1/2" BSP	1/2" NPT	**Z101408**	-
3/4" BSP	3/4" NPT	**Z101412**	-
1" BSP	1" NPT	**Z101416**	-
1"1/4 BSP	1"1/4 NPT	**Z101420**	-
1"1/2 BSP	1"1/2 NPT	**Z101424**	-
2" BSP	2" NPT	**Z101432**	-

Reductor macho BSP 60° - macho NPT

Reducer adaptor male BSP 60° - male NPT

Réduction mâle BSP cône 60° - mâle BRIGGS NPT

Nipples di riduzione BSP 60° - NPT 60°

ROSCA THREAD		Referencia Part n°	€
1/8" BSP	1/4" NPT	**Z10240204**	-
1/4" BSP	1/8" NPT	**Z10240402**	-
1/4" BSP	3/8" NPT	**Z10240406**	-
1/4" BSP	1/2" NPT	**Z10240408**	-
3/8"BSP	1/4"NPT	**Z10240604**	-
3/8" BSP	1/2" NPT	**Z10240608**	-
3/8" BSP	3/4" NPT	**Z10240612**	-
1/2" BSP	3/8" NPT	**Z10240806**	-
1/2" BSP	3/4" NPT	**Z10240812**	-
5/8" BSP	3/4" NPT	**Z10241012**	-
3/4" BSP	1/4" NPT	**Z10241204**	-
3/4" BSP	3/8" NPT	**Z10241206**	-
3/4" BSP	1/2" NPT	**Z10241208**	-
3/4" BSP	1" NPT	**Z10241216**	-
3/4" BSP	1" 1/4 NPT	**Z10241220**	-
3/4" BSP	1"1/2 NPT	**Z10241224**	-
1" BSP	1/2" NPT	**Z10241608**	-
1" BSP	3/4" NPT	**Z10241612**	-
1" BSP	1"1/4 NPT	**Z10241620**	-
1" 1/4 BSP	1" NPT	**Z10242016**	-
1"1/4 BSP	1"1/2 NPT	**Z10242024**	-
1" 1/2 BSP	1" 1/4 NPT	**Z10242420**	-
1"1/2 BSP	2" NPT	**Z10242432**	-
2" BSP	1" 1/2 NPT	**Z10243224**	-

Adaptador macho BSP 60° - macho BSPT

Adaptor male BSP 60° - male BSPT

Adapteur mâle BSP cône 60° - mâle gaz conique BSPT

Niples di congiunzione BSP 60° - BSPT

ROSCA THREAD		Referencia Part n°	€
1/8" BSP	1/8" BSPT	**Z101202**	-
1/4" BSP	1/4" BSPT	**Z101204**	-
3/8" BSP	3/8" BSPT	**Z101206**	-
1/2" BSP	1/2" BSPT	**Z101208**	-
3/4" BSP	3/4" BSPT	**Z101212**	-
1" BSP	1" BSPT	**Z101216**	-
1"1/4 BSP	1"1/4 BSPT	**Z101220**	-
1"1/2 BSP	1"1/2 BSPT	**Z101224**	-
2" BSP	2" BSPT	**Z101232**	-

Adaptadores BSP

BSP Adaptors
Adapteurs BSP
Adattatori BSP

Reductor macho BSP 60° - macho BSPT

Reducer adaptor male BSP 60° - male BSPT

Réduction mâle BSP cône 60° - mâle gaz conique BSPT

Niples di riduzione BSP 60° - BSPT

ROSCA THREAD		Referencia Part n°	€
1/8" BSP	1/4" BSPT	**Z10220204**	-
1/4" BSP	1/8" BSPT	**Z10220402**	-
1/4" BSP	3/8" BSPT	**Z10220406**	-
1/4" BSP	1/2" BSPT	**Z10220408**	-
1/4" BSP	3/4" BSPT	**Z10220412**	-
3/8" BSP	1/2" BSPT	**Z10220608**	-
3/8" BSP	3/4" BSPT	**Z10220612**	-
1/2" BSP	1/4" BSPT	**Z10220804**	-
1/2" BSP	3/8" BSPT	**Z10220806**	-
1/2" BSP	3/4" BSPT	**Z10220812**	-
1/2" BSP	1" BSPT	**Z10220816**	-
5/8" BSP	3/4" BSPT	**Z10221012**	-
3/4" BSP	1/4" BSPT	**Z10221204**	-
3/4" BSP	3/8" BSPT	**Z10221206**	-
3/4" BSP	1/2" BSPT	**Z10221208**	-
3/4" BSP	1" BSPT	**Z10221216**	-
1" BSP	3/4" BSPT	**Z10221612**	-
1" BSP	1"1/4 BSPT	**Z10221620**	-
1" BSP	2" BSPT	**Z10221632**	-
1"1/4 BSP	1" BSPT	**Z10222016**	-
1"1/4 BSP	1"1/2 BSPT	**Z10222024**	-
1"1/4 BSP	2" BSPT	**Z10222032**	-
1 1/2" BSP	1" 1/4 BSPT	**Z10222420**	-
1"1/2 BSP	2" BSPT	**Z10222432**	-

Prolongador macho BSP 60° - hembra fija BSP

Adaptor male BSP 60° - fixed female BSP

Prolongateur mâle BSP cône 60° - femelle gaz fixe

Prolunga maschio BSP 60° - femmina BSP

ROSCA(M) THREAD (M)	ROSCA(H) THREAD(F)	Referencia Part n°	€
1/8" BSP	1/8" BSP	**Z106002**	-
1/4" BSP	1/4" BSP	**Z106004**	-
3/8" BSP	3/8" BSP	**Z106006**	-
1/2" BSP	1/2" BSP	**Z106008**	-
3/4" BSP	3/4" BSP	**Z106012**	-
1" BSP	1" BSP	**Z106016**	-
1"1/4 BSP	1"1/4 BSP	**Z106020**	-
1"1/2 BSP	1"1/2 BSP	**Z106024**	-
2" BSP	2" BSP	**Z106032**	-

Reductor macho BSP 60° - hembra fija BSP

Reducer adaptor male BSP 60° - fixed female BSP

Prolongateur réducteur mâle BSP cône 60° - femelle gaz

Prolunga di riduzione maschio BSP 60° - femmina BSP

ROSCA (M) THREAD (M)	ROSCA (H) THREAD (F)	Referencia Part n°	€
1/8" BSP	1/4" BSP	**Z10600204**	-
1/8" BSP	3/8" BSP	**Z10600206**	-
1/4" BSP	1/8" BSP	**Z10600402**	-
1/4" BSP	3/8" BSP	**Z10600406**	-
1/4" BSP	1/2" BSP	**Z10600408**	-
3/8" BSP	1/4" BSP	**Z10600604**	-
3/8" BSP	1/2" BSP	**Z10600608**	-
1/2" BSP	1/4" BSP	**Z10600804**	-
1/2" BSP	3/8"BSP	**Z10600806**	-
1/2" BSP	3/4" BSP	**Z10600812**	-
1/2" BSP	1" BSP	**Z10600816**	-
3/4" BSP	3/8" BSP	**Z10601206**	-
3/4" BSP	1/2" BSP	**Z10601208**	-
3/4" BSP	1" BSP	**Z10601216**	-
1" BSP	3/4" BSP	**Z10601612**	-
1" BSP	1"1/4 BSP	**Z10601620**	-
1" BSP	1"1/2 BSP	**Z10601624**	-
1"1/4 BSP	1" BSP	**Z10602016**	-
1"1/2 BSP	1"1/4 BSP	**Z10602420**	-
1"1/2 BSP	2" BSP	**Z10602432**	-
2" BSP	1"1/2 BSP	**Z10603224**	-

Prolongador macho BSPT - hembra fija BSP

NEW

Adaptor male BSPT - fixed female BSP

Prolongateur mâle BSPT - femelle gaz fixe

Prolunga maschio BSPT - femmina BSP

ROSCA THREAD		Referencia Part n°	€
1/4"BSPT	1/4"BSP	**Z106104**	-
3/8" BSPT	3/8" BSP	**Z106106**	-
1/2" BSPT	1/2" BSP	**Z106108**	-
3/4" BSPT	3/4" BSP	**Z106112**	-
1" BSPT	1" BSP	**Z106116**	-

Adaptadores BSP

BSP Adaptors
Adapteurs BSP
Adattatori BSP

Adaptador hembra giratoria - hembra giratoria BSP 60°

Adaptor BSP 60° swivel female - BSP 60° swivel female

Adapteur femelle tournante BSP 60° - femelle tournante BSP 60°

Niples femmina - femmina girevole BSP 60°

ROSCA THREAD		Referencia Part n°	€
1/4" BSP	1/4" BSP	**Z117204**	-
3/8" BSP	3/8" BSP	**Z117206**	-
1/2" BSP	1/2" BSP	**Z117208**	-
3/4" BSP	3/4" BSP	**Z117212**	-
1" BSP	1" BSP	**Z117216**	-
1" 1/4 BSP	1" 1/4 BSP	**Z117220**	-
1" 1/2 BSP	1" 1/2 BSP	**Z117224**	-
2" BSP	2" BSP	**Z117232**	-

Adaptador macho - hembra giratoria BSP cono 60°

Adaptor male BSP 60° - swivel female BSP 60°

Adapteur mâle BSP - femelle tournante BSP cône 60°

Niples maschio - femmina girevole BSP 60°

ROSCA (M) THREAD (M)	ROSCA (H) THREAD (F)	Referencia Part n°	€
1/8" BSP	1/8" BSP	**Z117002**	-
1/4" BSP	1/4" BSP	**Z117004**	-
1/4" BSP	1/4" BSP	**Z117004H19**	-
3/8" BSP	3/8" BSP	**Z117006**	-
1/2" BSP	1/2" BSP	**Z117008**	-
3/4" BSP	3/4" BSP	**Z117012**	-
1" BSP	1" BSP	**Z117016**	-
1"1/4 BSP	1"1/4 BSP	**Z117020**	-
1"1/2 BSP	1"1/2 BSP	**Z117024**	-
2" BSP	2" BSP	**Z117032**	-

Reductor macho - hembra giratoria BSP cono 60°

Reducer male BSP 60° - swivel female BSP 60°

Réduction mâle BSP - femelle tournante BSP cône 60°

Niples di riduzione maschio - femmina girevole BSP 60°

ROSCA (M) THREAD (M)	ROSCA (H) THREAD (F)	Referencia Part n°	€
1/8" BSP	1/4" BSP	**Z11730204**	-
1/4" BSP	1/8" BSP	**Z11730402**	-
1/4" BSP	3/8" BSP	**Z11730406**	-
3/8" BSP	1/4" BSP	**Z11730604**	-
3/8" BSP	1/2" BSP	**Z11730608**	-
1/2" BSP	3/8" BSP	**Z11730806**	-
1/2" BSP	3/4" BSP	**Z11730812**	-
3/4" BSP	1/2" BSP	**Z11731208**	-
3/4" BSP	1" BSP	**Z11731216**	-
1" BSP	3/4" BSP	**Z11731612**	-
1" BSP	1" 1/4 BSP	**Z11731620**	-
1" 1/4 BSP	1" BSP	**Z11732016**	-
1" 1/4 BSP	1" 1/2 BSP	**Z11732024**	-
1" 1/2 BSP	1" 1/4 BSP	**Z11732420**	-
1" 1/2 BSP	2" BSP	**Z11732432**	-
2" BSP	1" 1/2 BSP	**Z11733224**	-

Adaptadores BSP

BSP Adaptors
Adapteurs BSP
Adattatori BSP

Tapón reductor macho BSP 60° - hembra fija BSP

Reducer plug male BSP 60° - fixed female BSP

Bouchon réducteur mâle BSP cône 60° - femelle gaz

Tappo di riduzione maschio BSP 60° - femmina BSP

ROSCA (M) THREAD (M)	ROSCA (H) THREAD (F)	Referencia Part n°	€
1/4" BSP	1/8" BSP	**Z11500402**	-
3/8" BSP	1/8" BSP	**Z11500602**	-
3/8" BSP	1/4" BSP	**Z11500604**	-
1/2" BSP	1/4" BSP	**Z11500804**	-
1/2" BSP	3/8" BSP	**Z11500806**	-
3/4" BSP	1/2" BSP	**Z11501208**	-
1" BSP	1/2" BSP	**Z11501608**	-
1" BSP	3/4" BSP	**Z11501612**	-
1" 1/4 BSP	3/4" BSP	**Z11502012**	-
1" 1/4 BSP	1" BSP	**Z11502016**	-
1" 1/2 BSP	1" BSP	**Z11502416**	-
2" BSP	1" BSP	**Z11503216**	-
2" BSP	1" 1/2 BSP	**Z11503224**	-

Tapón hembra hexagonal rosca BSP

BSP fixed female plug

Bouchon femelle gaz

Tappo femmina fissa BSP

ROSCA THREAD	Referencia Part n°	€
1/4" BSP	**Z107204**	-
3/8" BSP	**Z107206**	-
1/2" BSP	**Z107208**	-
3/4" BSP	**Z107212**	-
1" BSP	**Z107216**	-
1"1/4 BSP	**Z107220**	-
1"1/2 BSP	**Z107224**	-
2" BSP	**Z107232**	-

Tapón macho hexagonal rosca BSP 60°

BSP male hexagonal plug

Bouchon mâle BSP cône 60°

Tappo maschio esagonale BSP 60°

ROSCA THREAD	Referencia Part n°	€
1/8" BSP	**Z107002**	-
1/4" BSP	**Z107004**	-
3/8" BSP	**Z107006**	-
1/2" BSP	**Z107008**	-
3/4" BSP	**Z107012**	-
1" BSP	**Z107016**	-
1"1/4 BSP	**Z107020**	-
1"1/2 BSP	**Z107024**	-
2" BSP	**Z107032**	-

Tapón hembra giratoria BSP cono 60°

BSP swivel female plug

Bouchon femelle tournante BSP cône 60°

Tappo femmina girevole BSP 60°

ROSCA THREAD	Referencia Part n°	€
1/4" BSP	**Z107504**	-
3/8" BSP	**Z107506**	-
1/2" BSP	**Z107508**	-
3/4" BSP	**Z107512**	-
1" BSP	**Z107516**	-
1" 1/4 BSP	**Z107520**	-
1"1/2 BSP	**Z107524**	-
2" BSP	**Z107532**	-

Adaptadores BSP

BSP Adaptors
Adapteurs BSP
Adattatori BSP

Manguito redondo roscado hembra BSP

Adaptor female fixed BSP - female fixed BSP

Manchon femelle gaz ronde

Manicotto femmina - femmina BSP

ROSCA THREAD	Referencia Part n°	€
1/8" BSP	**Z131002**	-
1/4" BSP	**Z131004**	-
3/8" BSP	**Z131006**	-
1/2" BSP	**Z131008**	-
5/8" BSP	**Z131010**	-
3/4" BSP	**Z131012**	-
1" BSP	**Z131016**	-
1"1/4 BSP	**Z131020**	-
1"1/2 BSP	**Z131024**	-
2" BSP	**Z131032**	-

Manguito hexagonal roscado hembra BSP

Adaptor hexagonal female fixed BSP - female fixed BSP

Manchon femelle gaz - femelle gaz hexagone

Prolunga esagonale femmina - femmina BSP

ROSCA THREAD	Referencia Part n°	€
1/4" BSP	**Z103104**	-
3/8" BSP	**Z103106**	-
1/2" BSP	**Z103108**	-
3/4" BSP	**Z103112**	-
1" BSP	**Z103116**	-
1"1/4 BSP	**Z103120**	-
1"1/2 BSP	**Z103124**	-

Manguito reducción hexagonal roscado hembra BSP

Reducer hexagonal female fixed BSP - female fixed BSP

Manchon réducteur femelle gaz - femelle gaz hexagone

Riduzione femmina - femmina BSP

ROSCA THREAD			Referencia Part n°	€
3/8" BSP	1/4" BSP		**Z10310604**	-
1/2" BSP	1/4" BSP		**Z10310804**	-
1/2" BSP	3/8" BSP		**Z10310806**	-
3/4" BSP	1/2" BSP		**Z10311208**	-
1" BSP	3/4" BSP		**Z10311612**	-
1"1/4 BSP	1" BSP	NEW	**Z10312016**	-

Pasatabiques sin tuerca BSP cono 60°

Straight bulkhead adaptor BSP 60° without nut

Passe-cloison mâle BSP 60° - mâle BSP 60° sans équiper

Nipples passaparete BSP 60° (senza controdado)

ROSCA THREAD	Referencia Part n°	€
1/4" BSP	**Z116004**	-
3/8" BSP	**Z116006**	-
1/2" BSP	**Z116008**	-
3/4" BSP	**Z116012**	-
1" BSP	**Z116016**	-
1" 1/4 BSP	**Z116020**	-
1" 1/2 BSP	**Z116024**	-
2" BSP	**Z116032**	-

Tuerca pasatabiques BSP

Conter nut for BSP bulkhead

Contre-écrou passe-cloison gaz

Controdado per passaparete

ROSCA THREAD	Referencia Part n°	€
1/4" BSP	**Z116104**	-
3/8" BSP	**Z116106**	-
1/2" BSP	**Z116108**	-
3/4" BSP	**Z116112**	-
1" BSP	**Z116116**	-
1" 1/4 BSP	**Z116120**	-
1" 1/2 BSP	**Z116124**	-
2" BSP	**Z116132**	-

Adaptadores BSP

BSP Adaptors
Adapteurs BSP
Adattatori BSP

Tornillo orientable simple BSP

BSP Bolt for banjo

Vis creuse simple pour banjo BSP

Bullone forato BSP

ROSCA THREAD	Referencia Part n°	€
1/8" BSP	**Z109002**	-
1/4" BSP	**Z109004**	-
3/8" BSP	**Z109006**	-
1/2" BSP	**Z109008**	-
3/4" BSP	**Z109012**	-
1" BSP	**Z109016**	-

Tornillo orientable simple Métrico

Metric bolt for banjo

Vis creuse simple for banjo Métrique

Bullone forato Metrico

ROSCA THREAD	Referencia Part n°	€
M12X1.5	**Z109212**	-
M14X1.5	**Z109214**	-
M16X1.5	**Z109216**	-
M18X1.5	**Z109218**	-
M22X1.5	**Z109222**	-
M26X1.5	**Z109226**	-
M30X2	**Z109230**	-

Esférico BSP - macho BSP (60°)

BSP Banjo-BSP male (60°)

Banjo passage gaz x mâle BSP (60°)

Adattatore ad occhio filettato BSP 60°

ROSCA THREAD	ø	Referencia Part n°	€
1/4" BSP	1/4"	**Z114004**	-
3/8" BSP	3/8"	**Z114006**	-
1/2" BSP	1/2"	**Z114008**	-
3/4" BSP	3/4"	**Z114012**	-
1" BSP	1"	**Z114016**	-

Juntas metal FKM Gas Autocentrantes

BSP Bonded Seal FKM Self-centering

Bague BS gaz FKM auto-centrée

Rondella Bonded BSP Autocentrante (INOX-FKM)

ROSCA THREAD	Referencia Part n°	€
1/8" BSP	**ZVT21002**	-
1/4" BSP	**ZVT21004**	-
3/8" BSP	**ZVT21006**	-
1/2" BSP	**ZVT21008**	-
5/8" BSP	**ZVT21010**	-
3/4" BSP	**ZVT21012**	-
1" BSP	**ZVT21016**	-
1" 1/4 BSP	**ZVT21020**	-
1" 1/2 BSP	**ZVT21024**	-
2" BSP	**ZVT21032**	-
2" 1/2 BSP	**ZVT21040**	-

Juntas metal FKM Métricas Autocentrantes

Metric Bonded Seal in FKM Self-centering

Bague BS Métrique FKM auto-centrée

Rondella Bonded metrica Autocentrante (INOX-FKM)

ROSCA THREAD	Referencia Part n°	€
M6X1	**ZVT32006**	-
M8X1	**ZVT32008**	-
M10X1	**ZVT32010**	-
M12X1,5	**ZVT32012**	-
M14X1,5	**ZVT32014**	-
M16X1,5	**ZVT32016**	-
M18X1,5	**ZVT32018**	-
M20X1,5	**ZVT32020**	-
M22X1,5	**ZVT32022**	-
M24X1.5	**ZVT32024**	-
M26X1.5	**ZVT32026**	-
M27X1,5	**ZVT32027**	-
M30X2	**ZVT32030**	-
M36X2	**ZVT32036**	-
M42X2	**ZVT32042**	-
M48X2	**ZVT32048**	-

Adaptadores BSP

BSP Adaptors
Adapteurs BSP
Adattatori BSP

Codo 90° macho - hembra giratoria BSP cono 60°

90° Elbow swivel female BSP 60° - male BSP 60°

Adapteur coude 90° accesoriel mâle BSP - femelle tournante BSP cône 60°

Curva 90° maschio - femmina girevole BSP 60°

ROSCA THREAD		Referencia Part n°	€
1/4" BSP	1/4" BSP	**Z119404**	-
3/8" BSP	3/8" BSP	**Z119406**	-
1/2" BSP	1/2" BSP	**Z119408**	-
3/4" BSP	3/4" BSP	**Z119412**	-
1" BSP	1" BSP	**Z119416**	-
1"1/4 BSP	1"1/4 BSP	**Z119420**	-
1"1/2 BSP	1"1/2 BSP	**Z119424**	-
2" BSP	2" BSP	**Z119432**	-

Codo 45° macho - hembra giratoria BSP cono 60°

45° Ebow swivel female BSP 60° - male BSP 60°

Adapteur coude 45° accesoriel mâle BSP - femelle tournante BSP cône 60°

Curva 45° maschio - femmina girevole BSP 60°

ROSCA THREAD		Referencia Part n°	€
1/4" BSP	1/4" BSP	**Z119504**	-
3/8" BSP	3/8" BSP	**Z119506**	-
1/2" BSP	1/2" BSP	**Z119508**	-
3/4" BSP	3/4" BSP	**Z119512**	-
1" BSP	1" BSP	**Z119516**	-
1" 1/4 BSP	1" 1/4 BSP	**Z119520**	-
1"1/2 BSP	1" 1/2 BSP	**Z119524**	-
2" BSP	2" BSP	**Z119532**	-

Codo 90° hembra giratoria - hembra giratoria BSP cono 60°

90° Elbow swivel female BSP 60° - swivel female BSP 60°

Adapteur coude 90° femelle tournante BSP - femelle tournante cône 60°

Curva 90° femmina - femmina girevole BSP 60°

ROSCA THREAD		Referencia Part n°	€
1/4" BSP	1/4" BSP	**ZA119604**	-
3/8" BSP	3/8" BSP	**ZA119606**	-
1/2" BSP	1/2" BSP	**ZA119608**	-
3/4" BSP	3/4" BSP	**ZA119612**	-
1" BSP	1" BSP	**ZA119616**	-
1"1/4 BSP	1"1/4 BSP	**ZA119620**	-

Codo 45° hembra giratoria - hembra giratoria BSP cono 60°

45° Ebow swivel female BSP 60° - swivel female BSP 60°

Adapteur coude 45° femelle tournante BSP - femelle tournante BSP cône 60°

Curva 45° femmina girevole - femmina girevole BSP 60°

ROSCA THREAD		Referencia Part n°	€
1/4" BSP	1/4" BSP	**ZA119504**	-
3/8" BSP	3/8" BSP	**ZA119506**	-
1/2" BSP	1/2" BSP	**ZA119508**	-
3/4" BSP	3/4" BSP	**ZA119512**	-
1" BSP	1" BSP	**ZA119516**	-
1"1/4 BSP	1"1/4 BSP	**ZA119520**	-

Adaptadores BSP

BSP Adaptors
Adapteurs BSP
Adattatori BSP

Codo 90° macho - macho BSP cono 60°

90° Adaptor male - male BSP 60°

Adapteur coude 90° mâle BSP - mâle BSP cône 60° forge

Adattatore a 90° maschio - maschio BSP 60°

ROSCA THREAD		Referencia Part n°	€
1/8" BSP	1/8" BSP	**Z1190002**	-
1/4" BSP	1/4" BSP	**Z1190004**	-
3/8" BSP	3/8" BSP	**Z1190006**	-
1/2" BSP	1/2" BSP	**Z1190008**	-
3/4" BSP	3/4" BSP	**Z1190012**	-
1" BSP	1" BSP	**Z1190016**	-
1"1/4 BSP	1"1/4 BSP	**Z1190020**	-
1"1/2 BSP	1"1/2 BSP	**Z1190024**	-

Codo 90° macho BSP 60° - macho BSPT

90° Adaptor male BSP 60° - male BSPT

Adapteur coude 90° mâle BSP cône 60° - mâle gaz conique BSPT forge

Adattatore a 90° maschio BSP 60° - maschio BSPT

ROSCA THREAD		Referencia Part n°	€
1/8" BSP	1/8" BSPT	**Z119202**	-
1/4" BSP	1/4" BSPT	**Z119204**	-
3/8" BSP	3/8" BSPT	**Z119206**	-
1/2" BSP	1/2" BSPT	**Z119208**	-
3/4" BSP	3/4" BSPT	**Z119212**	-
1" BSP	1" BSPT	**Z119216**	-
1"1/4 BSP	1"1/4 BSPT	**Z119220**	-
1" 1/2 BSP	1" 1/2 BSPT	**Z119224**	-

Codo 90° regulable macho - macho BSP

90° Adjustable stud elbow male-male BSP

Coude 90° orientable mâle - mâle BSP

Adattatore a 90° orientabile maschio - maschio BSP

ROSCA THREAD		Referencia Part n°	€
1/4" BSP	1/4" BSP	**Z119704**	-
3/8" BSP	3/8" BSP	**Z119706**	-
1/2" BSP	1/2" BSP	**Z119708**	-
3/4" BSP	3/4" BSP	**Z119712**	-
1" BSP	1" BSP	**Z119716**	-

Codo 90° macho BSP 60° - macho NPT

90° Adaptor male BSP 60° - male NPT

Adapteur coude 90° mâle BSP 60° - mâle NPT forge

Adattatore a 90° maschio BSP 60° - maschio NPT 60°

ROSCA THREAD		Referencia Part n°	€
1/4" BSP	1/4" NPT	**Z11910404**	-
3/8" BSP	3/8" NPT	**Z11910606**	-
1/2" BSP	1/2" NPT	**Z11910808**	-
3/4" BSP	3/4" NPT	**Z11911212**	-
1" BSP	1" NPT	**Z11911616**	-

Codo 90° macho - hembra giratoria BSP cono 60°

90° Adaptor male - swivel female BSP 60°

Adapteur coude 90° mâle BSP - femelle tournante BSP cône 60° forge

Adattatore a 90° maschio - femmina girevole BSP 60°

ROSCA THREAD		Referencia Part n°	€
1/8" BSP	1/8" BSP	**Z119302**	-
1/4" BSP	1/4" BSP	**Z119304**	-
3/8" BSP	3/8" BSP	**Z119306**	-
1/2" BSP	1/2" BSP	**Z119308**	-
3/4" BSP	3/4" BSP	**Z119312**	-
1" BSP	1" BSP	**Z119316**	-
1"1/4 BSP	1"1/4 BSP	**Z119320**	-
1"1/2 BSP	1"1/2 BSP	**Z119324**	-

Codo 90° hembra fija - hembra fija BSP

90° Adaptor fixed female BSP

Adapteur coude 90° femelle fixe gaz cylindrique forge

Adattatore a 90° femmina fissa BSP

ROSCA THREAD		Referencia Part n°	€
1/8" BSP	1/8" BSP	**Z119602**	-
1/4" BSP	1/4" BSP	**Z119604**	-
3/8" BSP	3/8" BSP	**Z119606**	-
1/2" BSP	1/2" BSP	**Z119608**	-
3/4" BSP	3/4" BSP	**Z119612**	-
1" BSP	1" BSP	**Z119616**	-

Codo 90° hembra giratoria - hembra giratoria BSP cono 60°

90° Adaptor swivel female BSP 60°

Adapteur coude 90° femelle tournante BSP cône 60° forge

Adattatore a 90° femmina girevole BSP 60°

ROSCA THREAD		Referencia Part n°	€
1/4" BSP	1/4" BSP	**Z119804**	-
3/8" BSP	3/8" BSP	**Z119806**	-
1/2" BSP	1/2" BSP	**Z119808**	-
3/4" BSP	3/4" BSP	**Z119812**	-
1" BSP	1" BSP	**Z119816**	-
1" 1/4 BSP	1" 1/4 BSP	**Z119820**	-
1"1/2 BSP	1"1/2 BSP	**Z119824**	-

Codo 45° macho - hembra giratoria BSP cono 60°

45° Adaptor male - swivel female BSP 60°

Adapteur coude 45° mâle BSP - femelle tournante BSP cône 60° forge

Adattatore a 45° maschio - femmina girevole BSP 60°

ROSCA THREAD		Referencia Part n°	€
1/4" BSP	1/4" BSP	**Z118304**	-
3/8" BSP	3/8" BSP	**Z118306**	-
1/2" BSP	1/2" BSP	**Z118308**	-
3/4" BSP	3/4" BSP	**Z118312**	-
1" BSP	1" BSP	**Z118316**	-

Adaptadores BSP

BSP Adaptors
Adapteurs BSP
Adattatori BSP

Tes macho - macho - macho BSP cono 60°

Tees BSP 60° male

Adapteurs Té mâle BSP cône 60° forge

Adattarore a T maschio BSP 60°

ROSCA THREAD			Referencia Part n°	€
1/4" BSP	1/4" BSP	1/4" BSP	**Z122004**	-
3/8" BSP	3/8" BSP	3/8" BSP	**Z122006**	-
1/2" BSP	1/2" BSP	1/2" BSP	**Z122008**	-
3/4" BSP	3/4" BSP	3/4" BSP	**Z122012**	-
1" BSP	1" BSP	1" BSP	**Z122016**	-
1"1/4 BSP	1"1/4 BSP	1"1/4 BSP	**Z122020**	-
1"1/2 BSP	1"1/2 BSP	1"1/2 BSP	**Z122024**	-

Tes macho - macho - hembra giratoria BSP 60°

Tees BSP 60° male - male - swivel female

Adapteurs Té mâle BSP - mâle BSP - femelle tournante BSP cône 60° forge

Adattatore a T maschio - maschio - femmina girevole BSP 60°

ROSCA (M) THREAD (M)		ROSCA (H) THREAD (F)	Referencia Part n°	€
1/4" BSP	1/4" BSP	1/4" BSP	**Z122204**	-
3/8" BSP	3/8" BSP	3/8" BSP	**Z122206**	-
1/2" BSP	1/2" BSP	1/2" BSP	**Z122208**	-
3/4" BSP	3/4" BSP	3/4" BSP	**Z122212**	-
1" BSP	1" BSP	1" BSP	**Z122216**	-
1"1/4 BSP	1"1/4 BSP	1"1/4 BSP	**Z122220**	-
1"1/2 BSP	1"1/2 BSP	1"1/2 BSP	**Z122224**	-

Tes macho - hembra giratoria - macho BSP 60°

Tees BSP 60° male - swivel female - male

Adapteurs Té mâle BSP - femelle tournante - mâle BSP cône 60° forge

Adattatore a T maschio - femmina girevole - maschio BSP 60°

ROSCA (M) THREAD (M)	ROSCA (H) THREAD (F)	ROSCA (M) THREAD (M)	Referencia Part n°	€
1/4" BSP	1/4" BSP	1/4" BSP	**Z122404**	-
3/8" BSP	3/8" BSP	3/8" BSP	**Z122406**	-
1/2" BSP	1/2" BSP	1/2" BSP	**Z122408**	-
3/4" BSP	3/4" BSP	3/4" BSP	**Z122412**	-
1" BSP	1" BSP	1" BSP	**Z122416**	-
1"1/4 BSP	1"1/4 BSP	1"1/4 BSP	**Z122420**	-
1"1/2 BSP	1"1/2 BSP	1"1/2 BSP	**Z122424**	-

Tes hembras giratorias BSP cono 60°

Tees BSP 60° swivel female

Adapteurs Té femelle tournante BSP cône 60° forge

Adattatore a T femmina girevole BSP 60°

ROSCA THREAD			Referencia Part n°	€
1/4" BSP	1/4" BSP	1/4" BSP	**Z122804**	-
3/8" BSP	3/8" BSP	3/8" BSP	**Z122806**	-
1/2" BSP	1/2" BSP	1/2" BSP	**Z122808**	-
3/4" BSP	3/4" BSP	3/4" BSP	**Z122812**	-
1" BSP	1" BSP	1" BSP	**Z122816**	-
1"1/4 BSP	1"1/4 BSP	1"1/4 BSP	**Z122820**	-
1"1/2 BSP	1"1/2 BSP	1"1/2 BSP	**Z122824**	-

Tes hembras fijas BSP

Tees fixed female BSP

Adapteurs Té femelle gaz forge

Adattatore a T femmina fissa BSP

ROSCA THREAD			Referencia Part n°	€
1/4" BSP	1/4" BSP	1/4" BSP	**Z122604**	-
3/8" BSP	3/8" BSP	3/8" BSP	**Z122606**	-
1/2" BSP	1/2" BSP	1/2" BSP	**Z122608**	-
3/4" BSP	3/4" BSP	3/4" BSP	**Z122612**	-
1" BSP	1" BSP	1" BSP	**Z122616**	-

Tes macho BSP 60° - macho NPT central - macho BSP 60°

Tees BSP 60° male - NPT male center - BSP 60° male

Adapteurs Té mâle BSP 60° - mâle NPT central - mâle BSP 60° forge

Adattatore a T maschio BSP 60° - maschio NPT 60° centrale - maschio BSP 60°

ROSCA THREAD			Referencia Part n°	€
1/4" BSP	1/4" NPT	1/4" BSP	**Z12210404**	-
3/8" BSP	3/8" NPT	3/8" BSP	**Z12210606**	-
1/2" BSP	1/2" NPT	1/2" BSP	**Z12210808**	-
3/4" BSP	3/4" NPT	3/4" BSP	**Z12211212**	-
1" BSP	1" NPT	1" BSP	**Z12211616**	-

Tes macho BSP 60° - macho BSP 60° - macho NPT lateral

Tees BSP 60° male - BSP 60° male - NPT lateral male

Adapteurs Té mâle BSP 60° - mâle BSP 60° - mâle NPT latéral forge

Adattatore a T maschio BSP 60° - maschio BSP 60° - maschio NPT 60° laterale

ROSCA THREAD			Referencia Part n°	€
1/4" BSP	1/4" BSP	1/4" NPT	**Z12230404**	-
3/8" BSP	3/8" BSP	3/8" NPT	**Z12230606**	-
1/2" BSP	1/2" BSP	1/2" NPT	**Z12230808**	-
3/4" BSP	3/4" BSP	3/4" NPT	**Z12231212**	-
1" BSP	1" BSP	1" NPT	**Z12231616**	-

Cruz hembra fija BSP

Cross fixed female BSP

Croix BSP femelle fixe

Adattatore a croce femmina fissa BSP

ROSCA THREAD	Referencia Part n°	€
1/4" BSP	**Z122704**	-
3/8" BSP	**Z122706**	-
1/2" BSP	**Z122708**	-
3/4" BSP	**Z122712**	-
1" BSP	**Z122716**	-

Adaptadores NPT

NPT Adaptors
Adapteurs NPT
Adattatori NPT

Adaptor macho - macho NPT

Adaptor male NPT - male NPT

Adapteur mâle NPT - mâle NPT

Niples di congiunzione NPT

ROSCA THREAD		Referencia Part n°	€
1/4" NPT	1/4" NPT	**Z10150404**	-
3/8" NPT	3/8" NPT	**Z10150606**	-
1/2" NPT	1/2" NPT	**Z10150808**	-
3/4" NPT	3/4" NPT	**Z10151212**	-
1" NPT	1" NPT	**Z10151616**	-
1" 1/4 NPT	1" 1/4 NPT	**Z10152020**	-
1" 1/2 NPT	1" 1/2 NPT	**Z10152424**	-
2" NPT	2" NPT	**Z10153232**	-

Reductor macho - macho NPT

Reducer male NPT - male NPT

Réducteur mâle NPT- mâle NPT

Niples di riduzione maschio - maschio NPT

ROSCA THREAD		Referencia Part n°	€
1/4" NPT	1/8" NPT	**ZN10150402**	-
3/8" NPT	1/8" NPT	**ZN10150602**	-
3/8" NPT	1/4" NPT	**ZN10150604**	-
1/2" NPT	1/4" NPT	**ZN10150804**	-
1/2" NPT	3/8" NPT	**ZN10150806**	-
3/4" NPT	3/8" NPT	**ZN10151206**	-
3/4" NPT	1/2" NPT	**ZN10151208**	-
1" NPT	1/2" NPT	**ZN10151608**	-
1" NPT	3/4" NPT	**ZN10151612**	-
1" 1/4 NPT	1" NPT	**ZN10152016**	-
1" 1/2 NPT	1" NPT	**ZN10152416**	-
1" 1/2 NPT	1" 1/4 NPT	**ZN10152420**	-

Adaptador macho - hembra fija NPT

Adaptor male NPT - fixed female NPT

Adapteur mâle NPT - femelle fixe NPT

Niples di congiunzione maschio NPT - femmina fissa NPT

ROSCA (M) THREAD (M)	ROSCA (H) THREAD (F)	Referencia Part n°	€
1/8" NPT	1/8" NPT	**ZN10600202**	-
1/8" NPT	1/4" NPT	**ZN10600204**	-
1/4" NPT	1/8" NPT	**ZN10600402**	-
1/4" NPT	1/4" NPT	**ZN10600404**	-
1/4" NPT	3/8" NPT	**ZN10600406**	-
1/4" NPT	1/2" NPT	**ZN10600408**	-
3/8" NPT	1/4" NPT	**ZN10600604**	-
3/8" NPT	3/8" NPT	**ZN10600606**	-
3/8" NPT	1/2" NPT	**ZN10600608**	-
1/2" NPT	3/8" NPT	**ZN10600806**	-
1/2" NPT	1/2" NPT	**ZN10600808**	-
1/2" NPT	3/4" NPT	**ZN10600812**	-
3/4" NPT	1/2" NPT	**ZN10601208**	-
3/4" NPT	3/4" NPT	**ZN10601212**	-
3/4" NPT	1" NPT	**ZN10601216**	-
1" NPT	3/4" NPT	**ZN10601612**	-
1" NPT	1" NPT	**ZN10601616**	-

Reductor macho - hembra fija NPT

Reducer male NPT - fixed female NPT

Réducteur mâle NPT - femelle fixe NPT

Niples di riduzione maschio NPT - femmina fissa NPT

ROSCA (M) THREAD (M)	ROSCA (H) THREAD (F)	Referencia Part n°	€
3/8" NPT	1/8" NPT	**ZN11500602**	-
3/8" NPT	1/4" NPT	**ZN11500604**	-
1/2" NPT	1/4" NPT	**ZN11500804**	-
1/2" NPT	3/8" NPT	**ZN11500806**	-
3/4" NPT	1/4" NPT	**ZN11501204**	-
3/4" NPT	3/8" NPT	**ZN11501206**	-
3/4" NPT	1/2" NPT	**ZN11501208**	-
1" NPT	3/8" NPT	**ZN11501606**	-
1" NPT	1/2" NPT	**ZN11501608**	-
1" NPT	3/4" NPT	**ZN11501612**	-
1" 1/4 NPT	1" NPT	**ZN11502016**	-
1" 1/2 NPT	1" NPT	**ZN11502416**	-
1" 1/2 NPT	1" 1/4 NPT	**ZN11502420**	-

Adaptador macho NPT - hembra giratoria NPSM

Adaptor male NPT - swivel female NPSM

Adapteur mâle NPT - femelle tournante NPSM

Niples di congiunzione maschio NPT - femmina girevole NPSM

ROSCA (M) THREAD (M)	ROSCA (H) THREAD (F)	Referencia Part n°	€
1/8" NPT	1/8" NPSM	**ZN11700202**	-
1/4" NPT	1/4" NPSM	**ZN11700404**	-
3/8" NPT	3/8" NPSM	**ZN11700606**	-
3/8" NPT	1/2" NPSM	**ZN11700608**	-
1/2" NPT	1/2" NPSM	**ZN11700808**	-
1/2" NPT	3/4" NPSM	**ZN11700812**	-
3/4" NPT	3/4" NPSM	**ZN11701212**	-
3/4" NPT	1" NPSM	**ZN11701216**	-
1" NPT	1" NPSM	**ZN11701616**	-
1" 1/4 NPT	1" 1/4 NPSM	**ZN11702020**	-
1" 1/2 NPT	1" 1/2 NPSM	**ZN11702424**	-

Adaptador macho UNF - hembra giratoria NPSM

Adpator male UNF - swivel female NPSM

Adapteur mâle UNF - femelle tournante NPSM

Niples di giunzione maschio UNF - femmina girevole NPSM

ROSCA THREAD		Referencia Part n°	€
7/16" 20h UNF	1/4" 18h NPSM	**ZN11740404**	-
9/16" 18h UNF	3/8" 18h NPSM	**ZN11740606**	-
9/16" 18h UNF	1/2" 14h NPSM	**ZN11740608**	-
3/4" 16h UNF	1/2" 14h NPSM	**ZN11740808**	-
3/4" 16h UNF	3/4" 14h NPSM	**ZN11740812**	-
7/8" 14h UNF	1/2" 14h NPSM	**ZN11741008**	-
7/8" 14h UNF	3/4" 14h NPSM	**ZN11741012**	-
1"1/16 12h UNF	3/4" 14h NPSM	**ZN11741212**	-
1"5/16 12h UNF	1" 11 1/2h NPSM	**ZN11741616**	-
1"5/8 12h UNF	1"1/4 11-1/2h NPSM	**ZN11742020**	-

Adaptadores NPT

NPT Adaptors
Adapteurs NPT
Adattatori NPT

Tapón hembra fija NPT

S.S. NPT fixed cap

Bouchon femelle fixe NPT

Tappo femmina fissa NPT

ROSCA THREAD	Referencia Part n°	€
1/8" NPT	**ZN107202**	-
1/4" NPT	**ZN107204**	-
3/8" NPT	**ZN107206**	-
1/2" NPT	**ZN107208**	-
3/4" NPT	**ZN107212**	-
1" NPT	**ZN107216**	-

Tapón macho NPT

S.S. NPT male plug

Bouchon mâle NPT

Tappo maschio NPT

ROSCA THREAD	Referencia Part n°	€
1/8" NPT	**ZN107002**	-
1/4" NPT	**ZN107004**	-
3/8" NPT	**ZN107006**	-
1/2" NPT	**ZN107008**	-
3/4" NPT	**ZN107012**	-
1" NPT	**ZN107016**	-
1"1/4 NPT	**ZN107020**	-
1"1/2 NPT	**ZN107024**	-

Tapón Allen NPT

S.S. NPT Allen plug

Bouchon Allen NPT

Tappo conico NPT con esagono incassato

ROSCA THREAD	Referencia Part n°	€
1/4" NPT	**ZN107104**	-
3/8" NPT	**ZN107106**	-
1/2" NPT	**ZN107108**	-
3/4" NPT	**ZN107112**	-
1" NPT	**ZN107116**	-

Adaptador hexagonal hembra fija NPT

NPT hexagonal adaptor fixed female

Adapteur hexagonal femelle fixe NPT

Adattatore esagonale femmina fissa NPT

ROSCA THREAD		Referencia Part n°	€
1/8" NPT	1/8" NPT	**ZN10310202**	-
1/4" NPT	1/4" NPT	**ZN10310404**	-
3/8" NPT	3/8" NPT	**ZN10310606**	-
1/2" NPT	1/2" NPT	**ZN10310808**	-
3/4" NPT	3/4" NPT	**ZN10311212**	-
1" NPT	1" NPT	**ZN10311616**	-
1" 1/4 NPT	1" 1/4 NPT	**ZN10312020**	-

Adaptadores NPT

NPT Adaptors
Adapteurs NPT
Adattatori NPT

Codo 90° macho - macho NPT

90° elbow male NPT - male NPT

Coude 90° mâle NPT - mâle NPT

Adattatore a 90° maschio - maschio NPT

ROSCA THREAD		Referencia Part n°	€
1/8" NPT	1/8" NPT	**ZN119002**	-
1/4" NPT	1/4" NPT	**ZN119004**	-
3/8" NPT	3/8" NPT	**ZN119006**	-
1/2" NPT	1/2" NPT	**ZN119008**	-
3/4" NPT	3/4" NPT	**ZN119012**	-
1" NPT	1" NPT	**ZN119016**	-
1" 1/4 NPT	1" 1/4 NPT	**ZN119020**	-

Codo 90° macho NPT - hembra giratoria NPSM

90° elbow male NPT - swivel female NPSM

Coude 90° mâle NPT - femelle tournante NPSM

Adattatore a 90° maschio NPT - femmina girevole NPSM

ROSCA THREAD		Referencia Part n°	€
1/8" NPT	1/8" 27h NPSM	**ZN11930202**	-
1/4" NPT	1/4" - 18h NPSM	**ZN11930404**	-
1/4" NPT	3/8" - 18h NPSM	**ZN11930406**	-
3/8" NPT	3/8" - 18h NPSM	**ZN11930606**	-
3/8" NPT	1/2" - 14h NPSM	**ZN11930608**	-
1/2" NPT	1/2" - 14 NPSM	**ZN11930808**	-
1/2" NPT	3/4" - 14h NPSM	**ZN11930812**	-
3/4" NPT	1/2" - 14 NPSM	**ZN11931208**	-
3/4" NPT	3/4" - 14h NPSM	**ZN11931212**	-
3/4" NPT	1" - 11 1/2 h NPSM	**ZN11931216**	-
1" NPT	1" - 11 1/2 h NPSM	**ZN11931616**	-
1"1/4 NPT	1"1/4 - 11 1/2 h NPSM	**ZN11932020**	-

Codo 90° hembra fija - hembra fija NPT

90° elbow fixed female NPT - fixed female NPT

Coude 90° femelle fixe NPT - femelle fixe NPT

Adattatore a 90° femmina fissa - femmina fissa NPT

ROSCA THREAD		Referencia Part n°	€
1/8" NPT	1/8" NPT	**ZN11960202**	-
1/4" NPT	1/4" NPT	**ZN11960404**	-
3/8" NPT	3/8" NPT	**ZN11960606**	-
1/2" NPT	1/2" NPT	**ZN11960808**	-
3/4" NPT	3/4" NPT	**ZN11961212**	-
1" NPT	1" NPT	**ZN11961616**	-

Codo 45° macho - macho NPT

45° elbow male NPT - male NPT

Coude 45° mâle NPT - mâle NPT

Adattatore a 45° maschio - maschio NPT

ROSCA THREAD		Referencia Part n°	€
1/4" NPT	1/4" NPT	**ZN119804**	-
3/8" NPT	3/8" NPT	**ZN119806**	-
1/2" NPT	1/2" NPT	**ZN119808**	-
3/4 NPT	3/4 NPT	**ZN119812**	-
1" NPT	1" NPT	**ZN119816**	-

Codo 45° hembra fija- hembra fija NPT

45° elbow fixed female NPT - fixed female NPT

Coude 45° femelle fixe NPT - femelle fixe NPT

Adattatore a 45° femmina fissa - femmina fissa NPT

ROSCA THREAD		Referencia Part n°	€
1/4" NPT	1/4" NPT	**ZN139604**	-
3/8" NPT	3/8" NPT	**ZN139606**	-
1/2" NPT	1/2" NPT	**ZN139608**	-
3/4" NPT	3/4" NPT	**ZN139612**	-
1" NPT	1" NPT	**ZN139616**	-

Codo 45° macho NPT - hembra giratoria NPSM

45° elbow male NPT - swivel female NPSM

Coude 45° mâle NPT - swivel female NPSM

Adattatore a 45° maschio NPT - femmina girevole NPSM

ROSCA THREAD		Referencia Part n°	€
1/4" NPT	1/4" - 18h NPSM	**ZN139304**	-
3/8" NPT	3/8" - 18h NPSM	**ZN139306**	-
1/2" NPT	1/2" - 14h NPSM	**ZN139308**	-
3/4" NPT	3/4" - 14h NPSM	**ZN139312**	-
1" NPT	1" - 11 1/2 h NPSM	**ZN139316**	-

Adaptadores NPT

NPT Adaptors
Adapteurs NPT
Adattatori NPT

Tes macho-macho-macho NPT

NPT male tee

Té mâle NPT

Adattatore a T maschio conico NPT

ROSCA THREAD			Referencia Part n°	€
1/8" NPT	1/8" NPT	1/8" NPT	**ZN122002**	-
1/4" NPT	1/4" NPT	1/4" NPT	**ZN122004**	-
3/8" NPT	3/8" NPT	3/8" NPT	**ZN122006**	-
1/2" NPT	1/2" NPT	1/2" NPT	**ZN122008**	-
3/4" NPT	3/4" NPT	3/4" NPT	**ZN122012**	-
1" NPT	1" NPT	1" NPT	**ZN122016**	-

Tes hembra fija-hembra fija-hembra fija NPT

NPT fixed female tee

Té femelle fixe NPT

Adattatore a T femmina fissa NPT

ROSCA THREAD			Referencia Part n°	€
1/8" NPT	1/8" NPT	1/8" NPT	**ZN122602**	-
1/4" NPT	1/4" NPT	1/4" NPT	**ZN122604**	-
3/8" NPT	3/8" NPT	3/8" NPT	**ZN122606**	-
1/2" NPT	1/2" NPT	1/2" NPT	**ZN122608**	-
3/4" NPT	3/4" NPT	3/4" NPT	**ZN122612**	-
1" NPT	1" NPT	1" NPT	**ZN122616**	-

SI NO HAS ENCONTRADO
LO QUE BUSCAS, HABLEMOS.

SOMOS FABRICANTES
WE ARE MANUFACTURERS

IF YOU HAVE NOT FOUND
WHAT YOU ARE LOOKING FOR, LET'S TALK.

DICSA

#HYDRAULICSEXPERTS

Adaptadores O'Ring Boss

O'Ring Boss Adaptors
Adapteurs O'Ring Boss
Adattatori O'Ring Boss

Adaptador macho - macho O'Ring Boss

Adaptor male - male O'Ring Boss

Adapteur mâle - mâle O'Ring Boss

Adattatore maschio-maschio o-ring Boss

TUBO PIPE	ROSCA THREAD			Referencia Part n°	€
6	1/4"	7/16"-20h UNF	7/16"-20h UNF	**ZS64640606**	-
8	5/16"	1/2"-20h UNF	1/2"-20h UNF	**ZS64640808**	-
10	3/8"	9/16"-18h UNF	9/16"-18h UNF	**ZS64641010**	-
12	1/2"	3/4"-16h UNF	3/4"-16h UNF	**ZS64641212**	-
14-15-16	5/8"	7/8"-14h UNF	7/8"-14h UNF	**ZS64641616**	-
18-20	3/4"	1"1/16-12h UN	1"1/16-12h UN	**ZS64642020**	-
25	1"	1"5/16-12h UN	1"5/16-12h UN	**ZS64642525**	-

Adaptador macho O'Ring Boss - macho JIC 37°

Adaptor male O'Ring Boss - male JIC 37°

Adapteur mâle O'Ring Boss- mâle JIC 37°

Adattatore maschio o-ring Boss - maschio JIC 37°

TUBO PIPE	ROSCA THREAD			Referencia Part n°	€
6	1/4"	7/16"-20h UNF	7/16"-20h UNF	**ZS22006**	-
8	5/16"	1/2"-20h UNF	1/2"-20h UNF	**ZS22008**	-
10	3/8"	9/16"-18h UNF	9/16"-18h UNF	**ZS22010**	-
12	1/2"	3/4"-16h UNF	3/4"-16h UNF	**ZS22012**	-
14-15-16	5/8"	7/8"-14h UNF	7/8"-14h UNF	**ZS22016**	-
18-20	3/4"	1"1/16-12h UN	1"1/16-12h UN	**ZS22020**	-
25	1"	1"5/16-12h UN	1"5/16-12h UN	**ZS22025**	-
30-32	1"1/4	1"5/8-12h UN	1"5/8-12h UN	**ZS22032**	-
38	1"1/2	1"7/8-12h UN	1"7/8-12h UN	**ZS22038**	-

Adaptador macho O'Ring Boss - macho regulable O'Ring Boss

Adaptor male O'Ring Boss - adjustable male O'Ring Boss

Adapteur mâle O'Ring Boss - mâle réglable O'Ring Boss

Adattatore maschio o-ring Boss - maschio regolabile o-ring Boss

TUBO PIPE	ROSCA THREAD			Referencia Part n°	€
6	1/4"	7/16"-20h UNF	7/16"-20h UNF	**ZS34740606**	-
10	3/8"	9/16"-18h UNF	9/16"-18h UNF	**ZS34741010**	-
12	1/2"	3/4"-16h UNF	3/4"-16h UNF	**ZS34741212**	-
14-15-16	5/8"	7/8"-14h UNF	7/8"-14h UNF	**ZS34741616**	-
18-20	3/4"	1"1/16-12h UN	1"1/16-12h UN	**ZS34742020**	-
25	1"	1"5/16-12h UN	1"5/16-12h UN	**ZS34742525**	-

Adaptador macho O'Ring Boss - macho NPT

Adaptor male O'Ring Boss - male NPT

Adapteur mâle O'Ring Boss- mâle NPT

Adattatore maschio o-ring Boss - maschio NPT

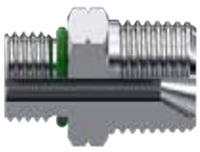

TUBO PIPE	ROSCA THREAD			Referencia Part n°	€
6	1/4"	7/16"-20h UNF	1/4" NPT	**ZS64010613**	-
10	3/8"	9/16"-18h UNF	3/8" NPT	**ZS64011017**	-
12	1/2"	3/4"-16h UNF	1/2" NPT	**ZS64011221**	-
14-15-16	5/8"	7/8"-14h UNF	1/2"NPT	**ZS64011621**	-
18-20	3/4"	1"1/16-12h UN	3/4" NPT	**ZS64012026**	-
25	1"	1"5/16-12h UN	1" NPT	**ZS64012533**	-

Adaptador macho O'Ring Boss - hembra giratoria JIC 37°

Adaptor male O'Ring Boss - swivel female JIC 37°

Adapteur mâle O'Ring Boss - femelle tournante JIC 37°

Adattatore maschio o-ring Boss - femmina gir. JIC 37°

TUBO PIPE	ROSCA (H) THREAD (F)		ROSCA (M) THREAD (M)	Referencia Part n°	€
6	1/4"	7/16" 20h UNF	7/16" 20h UNF	**ZS38006**	-
10	3/8"	9/16" 18h UNF	9/16" 18h UNF	**ZS38010**	-
12	1/2"	3/4" 16h UNF	3/4" 16h UNF	**ZS38012**	-
14-15-16	5/8"	7/8" 14h UNF	7/8" 14h UNF	**ZS38016**	-
18-20	3/4"	1"1/16 12hUN	1"1/16 12h UN	**ZS38020**	-
25	1"	1"5/16 12h UN	1"5/16 12h UN	**ZS38025**	-

Prolongador macho O'Ring Boss - hembra fija NPT

Adaptor male O'Ring Boss - fixed female NPT

Prolongateur mâle O'Ring Boss - femelle fixe NPT

Prolunga machio o-ring Boss - femmina fissa NPT

TUBO PIPE	ROSCA THREAD			Referencia Part n°	€
6	1/4"	7/16"-20h UNF	1/4"NPT	**ZS64050613**	-
10	3/8"	9/16"-18h UNF	3/8"NPT	**ZS64051017**	-
12	1/2"	3/4"-16h UNF	1/2"NPT	**ZS64051221**	-
14-15-16	5/8"	7/8"-14h UNF	1/2"NPT	**ZS64051621**	-
18-20	3/4"	1"1/16-12h UN	3/4"NPT	**ZS64052026**	-
25	1"	1"5/16-12h UN	1"NPT	**ZS64052533**	-

Tapón macho O'Ring Boss hexagonal

Male hexagonal O'Ring Boss plug

Bouchon mâle O'Ring Boss hexagonal

Tappo maschio o-ring Boss testa esagonale

ROSCA THREAD	Referencia Part n°	€
7/16"-20h UNF	**ZS640806**	-
1/2"-20h UNF	**ZS640808**	-
9/16"-18h UNF	**ZS640810**	-
3/4"-16h UNF	**ZS640812**	-
7/8"-14h UNF	**ZS640816**	-
1"1/16-12h UN	**ZS640820**	-
1"5/16-12h UN	**ZS640825**	-

Tapón macho O'Ring Boss Allen

Male allen O'Ring Boss plug

Bouchon mâle O'Ring Boss allen

Tappo maschio o-ring Boss esagono incassato

ROSCA THREAD	Referencia Part n°	€
7/16"-20h UNF	**ZS640906**	-
1/2"-20h UNF	**ZS640908**	-
9/16"-18h UNF	**ZS640910**	-
3/4"-16h UNF	**ZS640912**	-
7/8"-14h UNF	**ZS640916**	-
1"1/16-12h UN	**ZS640920**	-
1"5/16-12h UN	**ZS640925**	-

Adaptadores O'Ring Boss

O'Ring Boss Adaptors
Adapteurs O'Ring Boss
Adattatori O'Ring Boss

Codo 90° regulable macho O'Ring Boss - macho JIC 37°

90° Adjustable elbow male O'Ring Boss -male JIC 37°

Coude 90° orientable mâle O'Ring Boss - mâle JIC 37°

Curva a 90° regolabile maschio o-ring Boss - maschio JIC 37°

TUBO PIPE		ROSCA THREAD		Referencia Part n°	€
6	1/4"	7/16"-20h UNF	7/16"-20h UNF	**ZS57506**	-
8	5/16"	1/2"-20h UNF	1/2"-20h UNF	**ZS57508**	-
10	3/8"	9/16"-18h UNF	9/16"-18h UNF	**ZS57510**	-
12	1/2"	3/4"-16h UNF	3/4"-16h UNF	**ZS57512**	-
14-15-16	5/8"	7/8"-14h UNF	7/8"-14h UNF	**ZS57516**	-
18-20	3/4"	1"1/16-12h UN	1"1/16-12h UN	**ZS57520**	-
25	1"	1"5/16-12h UN	1"5/16-12h UN	**ZS57525**	-

Te regulable macho O'Ring Boss - macho JIC 37° - macho JIC 37°

Adjustable Tee male O'Ring Boss - male JIC 37° - male JIC 37°

Té orientable macho O'Ring Boss - macho JIC 37° - macho JIC 37°

Tee regolabile maschio o-ring Boss - maschio JIC 37° - maschio JIC 37°

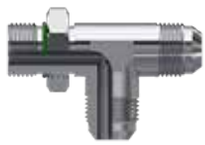

TUBO PIPE		ROSCA THREAD	Referencia Part n°	€
6	1/4"	7/16" - 20h UNF	**ZS680306**	-
8	5/16"	1/2" - 20h UNF	**ZS680308**	-
10	3/8"	9/16" - 18h UNF	**ZS680310**	-
12	1/2"	3/4" - 16h UNF	**ZS680312**	-
14-15-16	5/8"	7/8" 14h UNF	**ZS680316**	-
18-20	3/4"	1"1/16-12h UN	**ZS680320**	-
25	1"	1" 5/16-12h UN	**ZS680325**	-

Te regulable macho JIC 37° - macho O'Ring Boss - macho JIC 37°

Adjustable Tee male JIC 37° - male O'Ring Boss - male JIC 37°

Té orientable macho JIC 37° - macho O'Ring Boss - macho JIC 37°

Tee regolabile maschio JIC 37° - maschio o-ring Boss- maschio JIC 37°

TUBO PIPE		ROSCA THREAD	Referencia Part n°	€
6	1/4"	7/16" - 20h UNF	**ZS680406**	-
8	5/16"	1/2"-20h UNF	**ZS680408**	-
10	3/8"	9/16" - 18h UNF	**ZS680410**	-
12	1/2"	3/4" - 16h UNF	**ZS680412**	-
14-15-16	5/8"	7/8" 14h UNF	**ZS680416**	-
18-20	3/4"	1"1/16-12h UN	**ZS680420**	-
25	1"	1" 5/16-12h UN	**ZS680425**	-

Adaptadores ORFS

ORFS Adaptors
Adapteurs ORFS
Adattatori ORFS

Tuerca ORFS

ORFS Nut

Écrou ORFS

Dado ORFS

TUBO PIPE	ROSCA THREAD	Referencia Part n°	€
6-8	ORFS 9/16"-18h	**ZOR1020400**	-
10	ORFS 11/16"-16h	**ZOR1020600**	-
12	ORFS 13/16"-16h	**ZOR1020800**	-
14-15-16	ORFS 1"-14h	**ZOR1021000**	-
18-20	ORFS 1"3/16-12h	**ZOR1021200**	-
22-25	ORFS 1"7/16-12h	**ZOR1021600**	-
28-30-32	ORFS 1"11/16-12h	**ZOR1022000**	-
35-38	ORFS 2"-12h	**ZOR1022400**	-

Cono soldar ORFS

ORFS Welding nipple

Collet à souder ORFS

Ogiva a saldare ORFS

TUBO PIPE	ROSCA THREAD	Referencia Part n°	€
6	ORFS 9/16"-18h	**ZOR12730406**	-
8	ORFS 9/16"-18h	**ZOR12730408**	-
10	ORFS 11/16"-16h	**ZOR12730610**	-
12	ORFS 13/16"16h	**ZOR12730812**	-
14	ORFS 1"-14h	**ZOR12731014**	-
15	ORFS 1"-14h	**ZOR12731015**	-
16	ORFS 1"-14h	**ZOR12731016**	-
18	ORFS 1" 3/16-12h	**ZOR12731218**	-
20	ORFS 1" 3/16-12h	**ZOR12731220**	-
22	ORFS 1" 7/16-12h	**ZOR12731622**	-
30	ORFS 1"11/16-12h	**ZOR12732030**	-
32	ORFS 1"11/16-12h	**ZOR12732032**	-
38	ORFS 2"-12h	**ZOR12732438**	-

Tapón macho ORFS

ORFS Male plug

Bouchon mâle ORFS

Tappo maschio ORFS

ROSCA THREAD	Referencia Part n°	€
ORFS 9/16"-18h	**ZOR1040400**	-
ORFS 11/16"-16h	**ZOR1040600**	-
ORFS 13/16"-16h	**ZOR1040800**	-
ORFS 1"-14h	**ZOR1041000**	-
ORFS 1"3/16-12h	**ZOR1041200**	-
ORFS 1"7/16-12h	**ZOR1041600**	-
ORFS 1"11/16-12h	**ZOR1042000**	-
ORFS 2"-12h	**ZOR1042400**	-

Tapón hembra ORFS

ORFS cap

Bouchon femelle ORFS

Tappo femmina ORFS

ROSCA THREAD	Referencia Part n°	€
ORFS 9/16"-18h	**ZOR1050400**	-
ORFS 11/16"-16h	**ZOR1050600**	-
ORFS 13/16"-16h	**ZOR1050800**	-
ORFS 1"-14h	**ZOR1051000**	-
ORFS 1"3/16-12h	**ZOR1051200**	-
ORFS 1"7/16-12h	**ZOR1051600**	-
ORFS 1"11/16-12h	**ZOR1052000**	-
ORFS 2"-12h	**ZOR1052400**	-

Adaptador macho-macho ORFS

ORFS Male adaptor

Adapteur mâle ORFS

Adattatore maschio-maschio ORFS

ROSCA THREAD		Referencia Part n°	€
ORFS 9/16"-18h	ORFS 9/16"-18h	**ZOR2000404**	-
ORFS 11/16"-16h	ORFS 11/16"-16h	**ZOR2000606**	-
ORFS 13/16"-16h	ORFS 13/16"-16h	**ZOR2000808**	-
ORFS 1"-14h	ORFS 1"-14h	**ZOR2001010**	-
ORFS 1"3/16-12h	ORFS 1"3/16-12h	**ZOR2001212**	-
ORFS 1"7/16-12h	ORFS 1"7/16-12h	**ZOR2001616**	-
ORFS 1"11/16-12h	ORFS 1"11/16-12h	**ZOR2002020**	-
ORFS 2"-12h	ORFS 2"-12h	**ZOR2002424**	-

Adaptador macho ORFS-macho BSP

ORFS Male - BSP Male

Adapteur mâle ORFS - mâle BSP

Adattatore maschio ORFS- maschio BSP con guarnizione

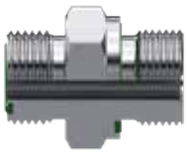

ROSCA THREAD			Referencia Part n°	€
ORFS 9/16"-18h	BSP 1/4"		**ZOR2020404**	-
ORFS 11/16"-16h	BSP 3/8"		**ZOR2020606**	-
ORFS 13/16"-16h	BSP 3/8"	NEW	**ZOR2020806**	-
ORFS 13/16"-16h	BSP 1/2"		**ZOR2020808**	-
ORFS 1"3/16-12h	BSP 1/2"		**ZOR2021208**	-
ORFS 1"3/16-12h	BSP 3/4"		**ZOR2021212**	-
ORFS 1"7/16-12h	BSP 1"		**ZOR2021616**	-
ORFS 1"7/16-12h	BSP 1" 1/4		**ZOR2021620**	-
ORFS 1"11/16-12h	BSP 1"	NEW	**ZOR2022016**	-
ORFS 1"11/16-12h	BSP 1" 1/4		**ZOR2022020**	-
ORFS 2"-12h	BSP 1" 1/2		**ZOR2022424**	-

Adaptadores ORFS

ORFS Adaptors
Adapteurs ORFS
Adattatori ORFS

Adaptador macho ORFS-macho Métrico

ORFS Male - Metric Male

Adapteur mâle ORFS - mâle Métrique

Adattatore maschio ORFS - maschio metrico con guarnizione

ROSCA THREAD		Referencia Part n°	€
ORFS 9/16"-18h	M12x1.5	**ZOR10170412**	-
ORFS 11/16"-16h	M16x1.5	**ZOR10170616**	-
ORFS 13/16"-16h	M18x1.5	**ZOR10170818**	-
ORFS 1"-14h	M22x1.5	**ZOR10171022**	-
ORFS 1"7/16-12h	M33x2	**ZOR10171633**	-
ORFS 1"11/16-12h	M42x2	**ZOR10172042**	-
ORFS 2"-12h	M48x2	**ZOR10172448**	-

Pasatabiques ORFS

ORFS Bulkhead

Passe-cloison ORFS

Passaparete ORFS

ROSCA THREAD	Referencia Part n°	€
ORFS 9/16"-18h	**ZOR1060404**	-
ORFS 11/16"-16h	**ZOR1060606**	-
ORFS 13/16"-16h	**ZOR1060808**	-
ORFS 1"-14h	**ZOR1061010**	-
ORFS 1"3/16-12h	**ZOR1061212**	-
ORFS 1"7/16-12h	**ZOR1061616**	-
ORFS 1"11/16-12h	**ZOR1062020**	-
ORFS 2"-12h	**ZOR1062424**	-

Adaptador macho-hembra giratoria ORFS

ORFS Male - ORFS Swivel female

Adapteur mâle - femelle tournante ORFS

Adattatore femmina girevole ORFS-maschio ORFS

ROSCA (H) THREAD (F)	ROSCA (M) THREAD (M)	Referencia Part n°	€
ORFS 9/16"-18h	ORFS 11/16"-16h	**ZOR3010406**	-
ORFS 11/16"-16h	ORFS 9/16"-18h	**ZOR3010604**	-
ORFS 13/16"-16h	ORFS 9/16"-18h	**ZOR3010804**	-
ORFS 13/16"-16h	ORFS 11/16"-16h	**ZOR3010806**	-
ORFS 1"-14h	ORFS 9/16"18h	**ZOR3011004**	-
ORFS 1"-14h	ORFS 11/16"16h	**ZOR3011006**	-
ORFS 1"-14h	ORFS 13/16"-16h	**ZOR3011008**	-
ORFS 1"3/16-12h	ORFS 11/16"-16h	**ZOR3011206**	-
ORFS 1"3/16-12h	ORFS 13/16-16h	**ZOR3011208**	-
ORFS 1"3/16-12h	ORFS 1"-14h	**ZOR3011210**	-
ORFS 1"7/16-12h	ORFS 13/16"-16h	**ZOR3011608**	-
ORFS 1"7/16-12h	ORFS 1"-14h	**ZOR3011610**	-
ORFS 1"7/16-12h	ORFS 1"3/16-12h	**ZOR3011612**	-
ORFS 1"11/16-12h	ORFS 1"3/16-12h	**ZOR3012012**	-
ORFS 1"11/16-12h	ORFS 1"7/16-12h	**ZOR3012016**	-

Adaptador macho ORFS-macho JIC 37°

ORFS Male - 37° JIC Male

Adapteur mâle ORFS - mâle JIC 37°

Adattatore maschio ORFS-JIC 37°

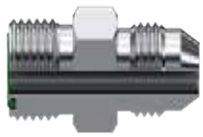

ROSCA THREAD		Referencia Part n°	€
ORFS 9/16"-18h	JIC 7/16"	**ZOR2040404**	-
ORFS 11/16"-16h	JIC 9/16"	**ZOR2040606**	-
ORFS 13/16"-16h	JIC 3/4"	**ZOR2040808**	-
ORFS 1"-14h	JIC 7/8"	**ZOR2041010**	-
ORFS 1"3/16-12h	JIC 1"1/16	**ZOR2041212**	-
ORFS 1"7/16-12h	JIC 1"5/16	**ZOR2041616**	-
ORFS 1"11/16"-12h	JIC 1"5/8	**ZOR2042020**	-
ORFS 2"-12h	JIC 1"7/8	**ZOR2042424**	-

Adaptador macho ORFS-hembra giratoria JIC 37°

ORFS Male - 37° JIC Swivel female

Adapteur mâle ORFS - femelle tournante JIC 37°

Adattatore maschio ORFS-femmina girevole JIC 37°

ROSCA THREAD		Referencia Part n°	€
ORFS 9/16"-18h	JIC 7/16"	**ZOR3020404**	-
ORFS 11/16"-16h	JIC 9/16"	**ZOR3020606**	-
ORFS 13/16"-16h	JIC 3/4"	**ZOR3020808**	-
ORFS 1"-14h	JIC 7/8"	**ZOR3021010**	-
ORFS 1"3/16-12h	JIC 1"1/16	**ZOR3021212**	-
ORFS 1"7/16-12h	JIC 1"5/16	**ZOR3021616**	-
ORFS 1"11/16-12h	JIC 1"5/8	**ZOR3022020**	-
ORFS 2"-12h	JIC 1"7/8	**ZOR3022424**	-

Adaptador macho JIC 37°-hembra giratoria ORFS

JIC Male - ORFS Swivel female

Adapteur mâle JIC 37° - femelle tournante ORFS

Adattatore maschio JIC 37° -femmina girevole ORFS

ROSCA THREAD		Referencia Part n°	€
JIC 7/16"	ORFS 9/16"-18 h	**ZOR3050404**	-
JIC 9/16"	ORFS 11/16"-16h	**ZOR3050606**	-
JIC 3/4"	ORFS 13/16"-16 h	**ZOR3050808**	-
JIC 7/8"	ORFS 1"-14h	**ZOR3051010**	-
JIC 1"1/16	ORFS 1"3/16-12 h	**ZOR3051212**	-
JIC 1" 5/16	ORFS 1"7/16-12 h	**ZOR3051616**	-
JIC 1"5/8	ORFS 1"11/16"-12h	**ZOR3052020**	-
JIC 1"7/8"	ORFS 2"-12h	**ZOR3052424**	-

Adaptadores ORFS

ORFS Adaptors
Adapteurs ORFS
Adattatori ORFS

Codo 90° macho-macho ORFS

90° ORFS male - ORFS male

Coude 90° mâle ORFS - mâle ORFS

Adattatore 90° maschio-maschio ORFS

ROSCA THREAD		Referencia Part n°	€
ORFS 9/16"-18h	ORFS 9/16"-18h	**ZOR4050404**	-
ORFS 11/16"-16h	ORFS 11/16"-16h	**ZOR4050606**	-
ORFS 13/16"-16h	ORFS 13/16"-16h	**ZOR4050808**	-
ORFS 1"-14h	ORFS 1"-14h	**ZOR4051010**	-
ORFS 1"3/16-12h	ORFS 1"3/16-12h	**ZOR4051212**	-
ORFS 1"7/16-12h	ORFS 1"7/16-12h	**ZOR4051616**	-
ORFS 1"11/16-12h	ORFS 1"11/16-12h	**ZOR4052020**	-
ORFS 2"-12h	ORFS 2"-12h	**ZOR4052424**	-

Codo 90° macho-hembra giratoria ORFS

90° ORFS swivel female - ORFS male

Coude 90° femelle tournante ORFS- mâle ORFS

Adattatore 90° maschio-femmina girevole ORFS

ROSCA (M) THREAD (M)	ROSCA (H) THREAD (F)	Referencia Part n°	€
ORFS 9/16"-18h	ORFS 9/16"-18h	**ZOR6000404**	-
ORFS 11/16"-16h	ORFS 11/16"-16h	**ZOR6000606**	-
ORFS 13/16"-16h	ORFS 13/16"-16h	**ZOR6000808**	-
ORFS 1"-14h	ORFS 1"-14h	**ZOR6001010**	-
ORFS 1"3/16-12h	ORFS 1"3/16-12h	**ZOR6001212**	-
ORFS 1"7/16-12h	ORFS 1"7/16-12h	**ZOR6001616**	-
ORFS 1"11/16-12h	ORFS 1"11/16-12h	**ZOR6002020**	-

Te macho-macho-macho ORFS

ORFS Male Tee

Té Mâle ORFS

Adattatore a T maschio ORFS

ROSCA THREAD	Referencia Part n°	€
ORFS 9/16"18h	**ZOR7000404**	-
ORFS 11/16"-16h	**ZOR7000606**	-
ORFS 13/16"-16h	**ZOR7000808**	-
ORFS 1"-14h	**ZOR7001010**	-
ORFS 1"3/16-12h	**ZOR7001212**	-
ORFS 1"7/16-12h	**ZOR7001616**	-
ORFS 1"11/16-12h	**ZOR7002020**	-
ORFS 2"-12h	**ZOR7002424**	-

Te macho-hembra giratoria-macho ORFS

ORFS Male-Swivel female-Male Tee

Té Mâle-Femelle tournante-Mâle ORFS

Adattatore a T maschio-femmina girevole centrale-maschio ORFS

ROSCA THREAD	Referencia Part n°	€
ORFS 9/16"-18h	**ZOR7010404**	-
ORFS 11/16"-16h	**ZOR7010606**	-
ORFS 13/16"-16h	**ZOR7010808**	-
ORFS 1"-14h	**ZOR7011010**	-
ORFS 1"3/16-12h	**ZOR7011212**	-
ORFS 1"7/16-12h	**ZOR7011616**	-
ORFS 1"11/16-12h	**ZOR7012020**	-
ORFS 2"-12h	**ZOR7012424**	-

Te macho-macho-hembra giratoria ORFS

ORFS Male-Male-Swivel Female Tee

Té Mâle-Mâle-Femelle tournante ORFS

Adattatore a T maschio-maschio-femmina girevole laterale ORFS

ROSCA THREAD	Referencia Part n°	€
ORFS 9/16"-18h	**ZOR7020404**	-
ORFS 11/16"-16h	**ZOR7020606**	-
ORFS 13/16"-16h	**ZOR7020808**	-
ORFS 1"-14h	**ZOR7021010**	-
ORFS 1"3/16-12h	**ZOR7021212**	-
ORFS 1"7/16-12h	**ZOR7021616**	-
ORFS 1" 11/16-12h	**ZOR7022020**	-

Juntas tóricas FKM verde para rosca ORFS

O'ring FKM green for ORFS thread

Joint torique FKM vert pour filetage ORFS

O´ring FKM verde per filetto ORFS

ROSCA THREAD	Referencia Part n°	€
ORFS 9/16"-18h	**JVORFS04**	-
ORFS 11/16"-16h	**JVORFS06**	-
ORFS 13/16"-16h	**JVORFS08**	-
ORFS 1"-14h	**JVORFS10**	-
ORFS 1"3/16-12h	**JVORFS12**	-
ORFS 1"7/16-12h	**JVORFS16**	-
ORFS 1" 11/16-12h	**JVORFS20**	-
ORFS 2"-12h	**JVORFS24**	-

Racores soldables 195
Welding fittings
Embouts à souder
Raccordi a saldare

Bridas soldables 203
Welding flanges
Brides à souder
Flangia a saldare

05

RACORES SOLDABLES

Welding fittings

Embouts à souder

Raccordi a saldare

Racores soldables

Welding fittings
Embouts à souder
Raccordi a saldare

Racores macho para soldar ▪ Welding Male ▪ Raccords mâle à souder ▪ Maschio a saldare | 195

81070 Z1035 Z10351 Z1033 Z1290 Z1032 Z1034

Racores BSP para soldar ▪ Welding BSP nuts ▪ Écrous tournants à souder ▪ Raccordi BSP a saldare | 196

Z1281 Z1037 Z1038 Z1282 Z1039 Z1040

Racores JIC para soldar ▪ Welding JIC fittings ▪ Raccords JIC à souder ▪ Raccordi JIC a saldare | 197

Z1283 Z1036 Z1041 Z1042 Z1284

Racores Métricos para soldar ▪ Welding metric fittings ▪ Raccords métriques à souder ▪ Raccordi metrici a saldare | 198

Z1051 ZCMORIL/S KZL00 KZC90 KZC45 Z1052 Z1054 Z1053 Z1055 Z1050

BSP >2" ▪ Welding fittings >2" ▪ Raccords à souder >2" ▪ Raccordi a saldare > 2" | 200

Z1270 Z12784 ZM1032

Conos ajuste BSP ▪ Other welding BSP fittings ▪ Autres raccords à souder BSP ▪ Raccordi a saldare vari BSP | 201

Z1270 Z1273 Z1274

Conos ajuste JIC ▪ Other welding JIC fittings ▪ Autres raccords à souder JIC ▪ Raccordi a saldare vari JIC | 201

Z1277 ZS110

Racores Microfundido para soldar ▪ Welding fittings microcast ▪ Raccords à souder micro-moulés ▪ Raccordi per saldatura microfuso | 202

ZFIG340...HS ZFIG340...S ZFIG341...MS

Bridas soldables

Welding flanges
Brides à souder
Flangia a saldare

Bridas fijas para soldar ▪ Fixed Forged flanges ▪ Brides DIN à souder fixes ▪ Flange a saldare | 203

ZBPN162633 ZBPN402635 ZBANSAWN150 ZBANSAWN300

Conjunto bridas DIN 2642 ▪ DIN 2642 swivel flanges set ▪ Ensemble brides tournantes DIN 2642 ▪ Flangia girevole DIN 2642 | 204

ZBPN102642 ZABARO2642 ZBTUBO

Conjunto bridas DIN 2656 ▪ DIN 2656 swivel flanges set ▪ Ensemble brides tournantes DIN 2656 ▪ Flangia girevole DIN 2656 | 205

ZBPN402656 ZABARO2656 ZBTUBO

Conjunto bridas ANSI-ASA ▪ ANSI-ASA swivel flanges set ▪ Ensemble brides ANSI-ASA ▪ Flangia girevole ANSI-ASA | 206

ZBANSASO150 ZBANSASO300 ZABAROANSA ZBTUBO

CONSULTA EL CATÁLOGO DE CONDUCCIONE

CHECK OUR CONNECTORS CATALOGUE

www.dicsaes.com

MANGUERAS ACERO INOXIDABLE
STAINLESS STEEL HOSES

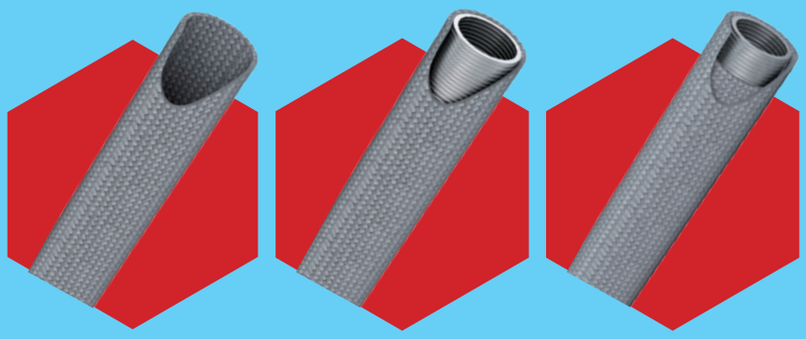

Mangueras de inoxidable corrugado para instalaciones en el sector químico, centrales eléctricas y plantas petroquímicas.

Convoluted stainless steel hoses for a variety of facilities, such us chemical sector, power plant, oil and gas.

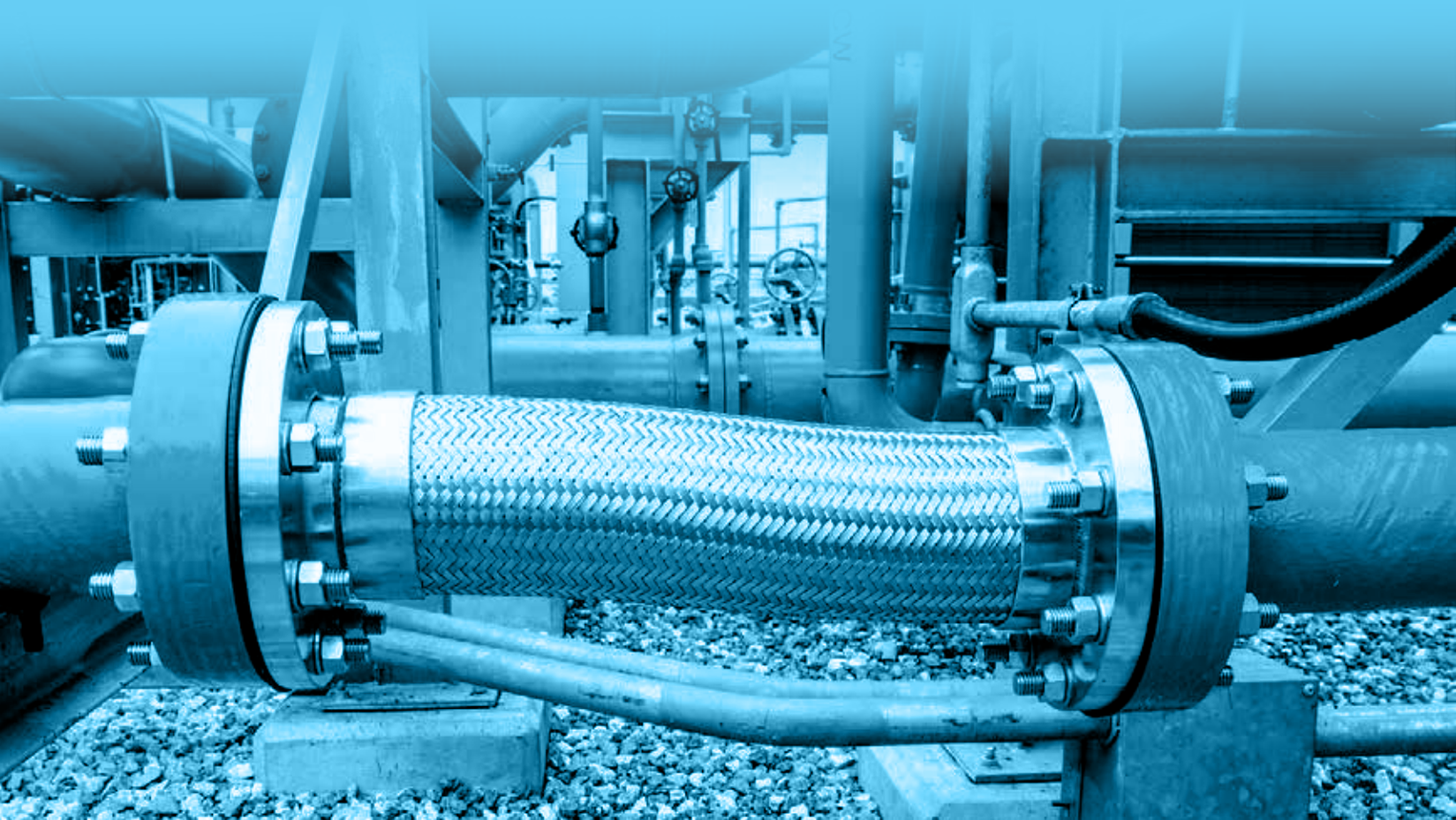

Racores soldables

Welding fittings
Embouts à souder
Raccordi a saldare

Casquillo soldable

Welding ferrule

Jupe à souder

Boccola a saldare

DN	Ø INT. Ø INNER	Referencia Part n°	€
1/4"	14	**810700400**	-
1/4"	12	**810700401**	-
3/8"	19	**810700600**	-
3/8"	17	**810700601**	-
1/2"	22	**810700800**	-
1/2"	19	**810700801**	-
5/8"	25	**810701000**	-
3/4"	30	**810701200**	-
3/4"	32	**810701201**	-
1"	35	**810701500**	-
1"	37	**810701600**	-
1"1/4	47,8	**810702000**	-
1"1/4	44,3	**810702001**	-
1"1/2	56.3	**810702400**	-
2"	66	**810703201**	-
2"1/2	84,9	**810704000**	-
2"1/2	95,6	**810704001**	-
3"	100	**810704801**	-
4"	125	**810706400**	-

Macho soldable BSP cono 60° con guía

Welding BSP 60° Male with guide

Mâle gaz BSP 60° à souder avec guide

Maschio a saldare BSP 60° con guida

ROSCA THREAD	DN	Referencia Part n°	€
1/4" BSP	1/4"	**Z103504**	-
3/8" BSP	3/8"	**Z103506**	-
1/2" BSP	1/2"	**Z103508**	-
3/4" BSP	3/4"	**Z103512**	-
1" BSP	1"	**Z103516**	-
1"1/4 BSP	1"1/4	**Z103520**	-
1"1/2 BSP	1"1/2	**Z103524**	-
2" BSP	2"	**Z103532**	-

Macho BSP 60° soldable interior

Inside welding BSP Male

Mâle à souder int. BSP

Maschio BSP 60° a saldare interno

ROSCA THREAD	DN	Referencia Part n°	€
1/4" BSP	1/4"	**Z1035104**	-
3/8" BSP	3/8"	**Z1035106**	-
1/2" BSP	1/2"	**Z1035108**	-
3/4" BSP	3/4"	**Z1035112**	-
1" BSP	1"	**Z1035116**	-
1"1/4 BSP	1"1/4	**Z1035120**	-
1"1/2 BSP	1"1/2	**Z1035124**	-
2" BSP	2"	**Z1035132**	-

Macho soldable BSP asiento plano con guía

Welding BSP Male flat seat with guide

Mâle gaz BSP fond plat à souder avec guide

Maschio a saldare BSP faccia piana con guida

ROSCA THREAD	DN	Referencia Part n°	€
1/4" BSP	1/4"	**Z103304**	-
3/8" BSP	3/8"	**Z103306**	-
1/2" BSP	1/2"	**Z103308**	-
3/4" BSP	3/4"	**Z103312**	-
1" BSP	1"	**Z103316**	-
1"1/4 BSP	1"1/4	**Z103320**	-
1"1/2 BSP	1"1/2	**Z103324**	-
2" BSP	2"	**Z103332**	-

Empalme liso soldable macho BSP 60°

Welding male BSP 60° union

Embout mâle lisse à souder BSP cône 60°

Mezzo Niples tondo maschio a saldare BSP 60°

ROSCA THREAD	DN	Referencia Part n°	€
1/8" BSP	1/8"	**Z129002**	-
1/4" BSP	1/4"	**Z129004**	-
3/8" BSP	3/8"	**Z129006**	-
1/2" BSP	1/2"	**Z129008**	-
3/4" BSP	3/4"	**Z129012**	-
1" BSP	1"	**Z129016**	-
1"1/4 BSP	1"1/4	**Z129020**	-
1"1/2 BSP	1"1/2	**Z129024**	-
2" BSP	2"	**Z129032**	-

Macho soldable BSPT cono 60° con guía

Welding BSPT Male 60° with guide

Mâle gaz conique à souder 60° avec guide

Maschio conico BSPT 60° con guida

ROSCA THREAD	DN	Referencia Part n°	€
1/4" BSPT	1/4"	**Z103204**	-
3/8" BSPT	3/8"	**Z103206**	-
1/2" BSPT	1/2"	**Z103208**	-
3/4" BSPT	3/4"	**Z103212**	-
1" BSPT	1"	**Z103216**	-
1"1/4 BSPT	1"1/4	**Z103220**	-
1"1/2 BSPT	1"1/2	**Z103224**	-
2" BSPT	2"	**Z103232**	-

Racores soldables

Welding fittings
Embouts à souder
Raccordi a saldare

Macho soldable NPT cono 60° con guía

Welding NPT Male 60° with guide

Mâle NPT à souder 60° avec guide

Maschio a saldare NPT 60° con guida

ROSCA THREAD	DN	Referencia Part n°	€
1/8" NPT	1/4"	**Z10340204**	-
1/4" NPT	1/4"	**Z10340400**	-
3/8" NPT	3/8"	**Z10340600**	-
1/2" NPT	1/2"	**Z10340800**	-
3/4" NPT	3/4"	**Z10341200**	-
1" NPT	1"	**Z10341600**	-
1"1/4 NPT	1"1/4	**Z10342000**	-
1"1/2 NPT	1"1/2	**Z10342400**	-
2" NPT	2"	**Z10343200**	-

Hembra giratoria prensada soldable BSP 60° con guía

Welding BSP 60° swept with guide

Femelle tournante BSP 60° à souder avec guide

Femmina girevole a saldare BSP 60° con guida

ROSCA THREAD	DN	Referencia Part n°	€
1/4" BSP	1/4"	**Z128104**	-
3/8" BSP	3/8"	**Z128106**	-
1/2" BSP	1/2"	**Z128108**	-
3/4" BSP	3/4"	**Z128112**	-
1" BSP	1"	**Z128116**	-
1"1/4 BSP	1"1/4	**Z128120**	-
1"1/2 BSP	1"1/2	**Z128124**	-
2" BSP	2"	**Z128132**	-

Hembra giratoria 90° prensada soldable BSP 60°

Welding BSP 60° swept 90°

Femelle tournante à souder 90° BSP cône 60°

Femmina girevole 90° a saldare BSP 60°

ROSCA THREAD	DN	Referencia Part n°	€
1/4" BSP	1/4"	**Z103704**	-
3/8" BSP	3/8"	**Z103706**	-
1/2" BSP	1/2"	**Z103708**	-
3/4" BSP	3/4"	**Z103712**	-
1" BSP	1"	**Z103716**	-
1"1/4 BSP	1"1/4	**Z103720**	-
1"1/2 BSP	1"1/2	**Z103724**	-
2" BSP	2"	**Z103732**	-

Hembra giratoria 45° prensada soldable BSP 60°

Welding BSP 60° swept 45°

Femelle tournante à souder 45° BSP cône 60°

Femmina girevole 45° a saldare BSP 60°

ROSCA THREAD	DN	Referencia Part n°	€
1/4" BSP	1/4"	**Z103804**	-
3/8" BSP	3/8"	**Z103806**	-
1/2" BSP	1/2"	**Z103808**	-
3/4" BSP	3/4"	**Z103812**	-
1" BSP	1"	**Z103816**	-
1"1/4 BSP	1"1/4	**Z103820**	-
1"1/2 BSP	1"1/2	**Z103824**	-
2" BSP	2"	**Z103832**	-

Hembra giratoria prensada soldable BSP asiento plano con guía

Welding BSP flat seat swept with guide

Femelle tournante BSP fond plat à souder avec guide

Femmina girevole a saldare BSP faccia piana con guida

ROSCA THREAD	DN	Referencia Part n°	€
1/4" BSP	1/4"	**Z128204**	-
3/8" BSP	3/8"	**Z128206**	-
1/2" BSP	1/2"	**Z128208**	-
3/4" BSP	3/4"	**Z128212**	-
1" BSP	1"	**Z128216**	-
1"1/4 BSP	1"1/4	**Z128220**	-
1"1/2 BSP	1"1/2	**Z128224**	-
2" BSP	2"	**Z128232**	-

Hembra giratoria 90° prensada soldable BSP asiento plano

Welding BSP Female 90° flat seat swept

Femelle tournante à souder 90° BSP fond plat

Femmina 90° girevole a saldare BSP faccia piana

ROSCA THREAD	DN	Referencia Part n°	€
1/4" BSP	1/4"	**Z103904**	-
3/8" BSP	3/8"	**Z103906**	-
1/2" BSP	1/2"	**Z103908**	-
3/4" BSP	3/4"	**Z103912**	-
1" BSP	1"	**Z103916**	-
1"1/4 BSP	1"1/4	**Z103920**	-
1"1/2 BSP	1"1/2	**Z103924**	-
2" BSP	2"	**Z103932**	-

Racores soldables

Welding fittings
Embouts à souder
Raccordi a saldare

Hembra giratoria 45° prensada soldable BSP asiento plano

Welding BSP Female 45° flat seat swept

Femelle tournante à souder 45° BSP fond plat

Femmina 45° girevole a saldare BSP faccia piana

ROSCA THREAD	DN	Referencia Part n°	€
1/4" BSP	1/4"	**Z104004**	-
3/8" BSP	3/8"	**Z104006**	-
1/2" BSP	1/2"	**Z104008**	-
3/4" BSP	3/4"	**Z104012**	-
1" BSP	1"	**Z104016**	-
1"1/4 BSP	1"1/4	**Z104020**	-
1"1/2 BSP	1"1/2	**Z104024**	-
2" BSP	2"	**Z104032**	-

Hembra giratoria prensada soldable JIC 37° con guía

Welding JIC female 37° swept with guide

Femelle tournante JIC 37° à souder avec guide

Femmina girevole a saldare JIC 37°

ROSCA THREAD	DN	Referencia Part n°	€
7/16" 20h UNF	1/4"	**Z12830704**	-
1/2" 20h UNF	1/4"	**Z12830804**	-
9/16" 18h UNF	3/8"	**Z12830906**	-
3/4" 16h UNF	3/8"	**Z12831206**	-
3/4" 16h UNF	1/2"	**Z12831208**	-
7/8" 14h UNF	1/2"	**Z12831408**	-
7/8" 14h UNF	5/8" NEW	**Z12831410**	-
1"1/16 12h UN	3/4"	**Z12831712**	-
1"5/16 12h UN	1"	**Z12832116**	-
1"5/8 12h UN	1"1/4	**Z12832620**	-
1"7/8 12h UN	1"1/2	**Z12833024**	-

Macho soldable JIC 37° con guía

Welding fixed male JIC 37° with guide

Mâle à souder JIC 37° avec guide

Maschio JIC 37° a saldare

ROSCA THREAD	DN	Referencia Part n°	€
7/16" 20h UNF	1/4"	**Z10360704**	-
1/2" 20h UNF	1/4"	**Z10360804**	-
9/16" 18h UNF	3/8"	**Z10360906**	-
3/4" 16h UNF	3/8"	**Z10361206**	-
3/4" 16h UNF	1/2"	**Z10361208**	-
7/8" 14h UNF	1/2"	**Z10361408**	-
7/8" 14h UNF	5/8"	**Z10361410**	-
1"1/16 12h UN	3/4"	**Z10361712**	-
1"5/16 12h UN	1"	**Z10362116**	-
1"5/8 12h UN	1"1/4	**Z10362620**	-
1"7/8 12h UN	1"1/4	**Z10363020**	-
1"7/8 12h UN	1"1/2 NEW	**Z10363024**	-
2" 1/2 12h UN	2"	**Z10364032**	-

Hembra giratoria 90° prensada soldable JIC 37°

Welding 90° JIC Female 37° swept

Femelle tournante à souder 90° JIC 37°

Femmina 90° girevole a saldare JIC

ROSCA THREAD	DN	Referencia Part n°	€
7/16" 20h UNF	1/4"	**Z10410704**	-
1/2" 20h UNF	1/4"	**Z10410804**	-
9/16" 18h UNF	3/8"	**Z10410906**	-
3/4" 16h UNF	1/2"	**Z10411208**	-
7/8" 14h UNF	1/2"	**Z10411408**	-
1"1/16 12h UN	3/4"	**Z10411712**	-
1"5/16 12h UN	1"	**Z10412116**	-
1"5/8 12h UN	1"1/4	**Z10412620**	-
1"7/8 12h UN	1"1/2	**Z10413024**	-

Hembra giratoria 45° prensada soldable JIC 37°

Welding 45° JIC Female 37° swept

Femelle tournante à souder 45° JIC 37°

Femmina 45° girevole a saldare JIC

ROSCA THREAD	DN	Referencia Part n°	€
7/16" 20h UNF	1/4"	**Z10420704**	-
1/2" 20h UNF	1/4"	**Z10420804**	-
9/16" 18h UNF	3/8"	**Z10420906**	-
3/4" 16h UNF	1/2"	**Z10421208**	-
7/8" 14h UNF	1/2"	**Z10421408**	-
1"1/16 12h UN	3/4"	**Z10421712**	-
1"5/16 12h UN	1"	**Z10422116**	-
1"5/8 12h UN	1"1/4	**Z10422620**	-
1"7/8 12h UN	1"1/2	**Z10423024**	-

Hembra giratoria prensada soldable JIC 37° con guía doble hexágono

Welding JIC female 37° swept with guide double hexagon

Femelle tournante JIC 37° à souder avec guide double hex.

Femmina girevole a saldare JIC 37° doppio esagono

ROSCA THREAD	DN	Referencia Part n°	€
7/16" 20 UNF	1/4"	**Z12840704**	-
1/2" 20 UNF	1/4"	**Z12840804**	-
9/16" 18 UNF	3/8"	**Z12840906**	-
3/4"16 UNF	1/2"	**Z12841208**	-
7/8"14 UNF	1/2"	**Z12841408**	-
7/8"14 UNF	5/8" NEW	**Z12841410**	-
1" 1/1612 UN	3/4"	**Z12841712**	-
1"5/16 12 UN	1"	**Z12842116**	-
1"5/8 12 UN	1"1/4	**Z12842620**	-
1"7/8 12 UN	1"1/2	**Z12843024**	-
2"1/2 12 UN	2" NEW	**Z12844032**	-

Racores soldables

Welding fittings
Embouts à souder
Raccordi a saldare

Tuercas Métricas

DIN nut

Écrou DIN

Dado DIN

TUBO PIPE	ROSCA THREAD	Referencia Part n°	€
6	M12X1.5	**Z10510612**	-
6	M14X1.5	**Z10510614**	-
8	M14X1.5	**Z10510814**	-
8	M16X1.5	**Z10510816**	-
10	M16X1.5	**Z10511016**	-
10	M18X1.5	**Z10511018**	-
12	M18X1.5	**Z10511218**	-
12	M20X1.5	**Z10511220**	-
14	M22X1.5	**Z10511422**	-
15	M22X1.5	**Z10511522**	-
16	M24X1.5	**Z10511624**	-
18	M26X1.5	**Z10511826**	-
20	M30X2	**Z10512030**	-
22	M30X2	**Z10512230**	-
25	M36X2	**Z10512536**	-
28	M36X2	**Z10512836**	-
30	M42X2	**Z10513042**	-
35	M45X2	**Z10513545**	-
38	M52X2	**Z10513852**	-
42	M52X2	**Z10514252**	-

Boquilla para soldar cono metal

Welding metal cone nipple

Raccord collet cône métallique à souder

Ogiva a saldare senza o'ring

TUBO PIPE	SERIE	Referencia Part n°	€
15X2,5	L	**Z CMORIL 15**	-
18X2,5	L	**Z CMORIL 18**	-
22X2,5	L	**Z CMORIL 22**	-
28X3	L	**Z CMORIL 28**	-
35X4	L	**Z CMORIL 35**	-
42X3	L	**Z CMORIL 42**	-
6X2	L/S	**Z CMORIS 6**	-
8X2	L/S	**Z CMORIS 8**	-
10X2	L/S	**Z CMORIS 10**	-
12X2	L/S	**Z CMORIS 12**	-
14X3	S	**Z CMORIS 14**	-
16X3	S	**Z CMORIS 16**	-
20X3	S	**Z CMORIS 20**	-
25X4	S	**Z CMORIS 25**	-
30X5	S	**Z CMORIS 30**	-
38X5	S	**Z CMORIS 38**	-

En caso de querer la pieza con junta, ver pág. 118 / *If you want the item with o'ring, please see page 118* / Si vous voulez la pièce avec le joint, voir page 118 / *En caso de querer la pieza con junta, ver pág. 118*

Espiga lisa métrica recta

Welding metric standpipe

Embout lisse métrique à souder

Estremità tubolare metrica diritta

Ø EXT. Ø OUTER	Ø INT. Ø INNER	Referencia Part n°	€
10	7	**KZL0010**	-
12	9	**KZL0012**	-
14	10	**KZL0014**	-
15	12	**KZL0015**	-
16	12	**KZL0016**	-
18	14	**KZL0018**	-
20	14	**KZL0020**	-
22	18	**KZL0022**	-
28	24	NEW **KZL0028**	-

Espiga lisa métrica 90°

Welding metric standpipe 90°

Embout lisse métrique 90° à souder

Estremità tubolare metrica a 90°

Ø EXT. Ø OUTER	Ø INT. Ø INNER	Referencia Part n°	€
6	4	**KZC9006**	-
8	4	**KZC9008**	-
10	6	**KZC9010**	-
12	8	**KZC9012**	-
15	11	**KZC9015**	-
18	14	**KZC9018**	-
20	12	**KZC9020**	-
22	18	**KZC9022**	-

Espiga lisa métrica 45°

Welding metric standpipe 45°

Embout lisse métrique 45° à souder

Estremità tubolare metrica a 45°

Ø EXT. Ø OUTER	Ø INT. Ø INNER	Referencia Part n°	€
6	4	**KZC4506**	-
8	4	**KZC4508**	-
10	6	**KZC4510**	-
12	8	**KZC4512**	-
14	10	**KZC4514**	-
15	11	**KZC4515**	-
16	11	**KZC4516**	-
18	14	**KZC4518**	-
20	12	**KZC4520**	-
22	18	**KZC4522**	-

Racores soldables

Welding fittings
Embouts à souder
Raccordi a saldare

Hembra giratoria 90° soldable métrica

Weldable metrical swivel female 90°

Femelle tournante 90° métrique à souder

Femmina girevole 90° metrica a saldare

TUBO PIPE	ROSCA THREAD	Referencia Part n°	€
10	M16X1.5	**Z10521610**	-
12	M18X1.5	**Z10521812**	-
12	M20X1.5	**Z10522012**	-
15	M22X1.5	**Z10522215**	-
18	M26X1.5	**Z10522618**	-
20	M30X2	**Z10523020**	-
22	M30X2	**Z10523022**	-
28	M36X2	**Z10523628**	-
42	M52X2	**Z10525242**	-

Hasta fin de existencias / *Until end of stock* / Jusqu´à la fin du stock / *Fino ad esaurimento*

Hembra giratoria 90° soldable métrica sin junta

Weldable metrical swivel female 90° without o´ring

Femelle tournante 90° métrique à souder sans joint

Femmina girevole 90° metrica a saldare senza O´ring

TUBO PIPE	ROSCA THREAD	Referencia Part n°	€
6	M12X1.5	**Z10541206**	-
8	M14X1.5	**Z10541408**	-
10	M16X1.5	**Z10541610**	-
12	M18X1.5	**Z10541812**	-
15	M22X1.5	**Z10542215**	-
18	M26X1.5	**Z10542618**	-
22	M30X2	**Z10543022**	-
28	M36X2	**Z10543628**	-
35	M45X2	**Z10544535**	-
42	M52X2	**Z10545242**	-
6	M14X1.5	**Z10541406**	-
8	M16X1.5	**Z10541608**	-
10	M18X1.5	**Z10541810**	-
12	M20X1.5	**Z10542012**	-
14	M22X1.5	**Z10542214**	-
16	M24X1.5	**Z10542416**	-
20	M30X2	**Z10543020**	-
25	M36X2	**Z10543625**	-
30	M42X2	**Z10544230**	-
38	M52X2	**Z10545238**	-

Hembra giratoria 45° soldable métrica

Weldable metrical swivel female 45°

Femelle tournante 45° métrique à souder

Femmina girevole 45° metrica a saldare

TUBO PIPE	ROSCA THREAD	Referencia Part n°	€
10	M16X1.5	**Z10531610**	-
12	M18X1.5	**Z10531812**	-
15	M22X1.5	**Z10532215**	-
22	M30X2	**Z10533022**	-
28	M36X2	**Z10533628**	-
42	M52X2	**Z10535242**	-
20	M30X2	**Z10533020**	-

Hasta fin de existencias / *Until end of stock* / Jusqu´à la fin du stock / *Fino ad esaurimento*

Hembra giratoria 45° soldable métrica sin junta

Weldable metrical swivel female 45° without o´ring

Femelle tournante 45° métrique à souder sans joint

Femmina girevole 45° metrica a saldare senza O´ring

TUBO PIPE	ROSCA THREAD	Referencia Part n°	€
6	M12X1.5	**Z10551206**	-
8	M14X1.5	**Z10551408**	-
10	M16X1.5	**Z10551610**	-
12	M18X1.5	**Z10551812**	-
15	M22X1.5	**Z10552215**	-
18	M26X1.5	**Z10552618**	-
22	M30X2	**Z10553022**	-
28	M36X2	**Z10553628**	-
35	M45X2	**Z10554535**	-
42	M52X2	**Z10555242**	-
6	M14X1.5	**Z10551406**	-
8	M16X1.5	**Z10551608**	-
10	M18X1.5	**Z10551810**	-
12	M20X1.5	**Z10552012**	-
14	M22X1.5	**Z10552214**	-
16	M24X1.5	**Z10552416**	-
20	M30X2	**Z10553020**	-
25	M36X2	**Z10553625**	-
30	M42X2	**Z10554230**	-
38	M52X2	**Z10555238**	-

Macho soldable Métrico

Welding DIN Male

Male métrique à souder

Maschio metrico sede 24° a saldare

TUBO PIPE	SERIE	Referencia Part n°	€
6	L	**Z1050L06**	-
8	L	**Z1050L08**	-
10	L	**Z1050L10**	-
12	L	**Z1050L12**	-
15	L	**Z1050L15**	-
18	L	**Z1050L18**	-
22	L	**Z1050L22**	-
28	L	**Z1050L28**	-
35	L	**Z1050L35**	-
42	L	**Z1050L42**	-
6	S	**Z1050S06**	-
8	S	**Z1050S08**	-
10	S	**Z1050S10**	-
12	S	**Z1050S12**	-
14	S	**Z1050S14**	-
16	S	**Z1050S16**	-
20	S	**Z1050S20**	-
25	S	**Z1050S25**	-
30	S	**Z1050S30**	-
38	S	**Z1050S38**	-

Racores soldables

Welding fittings
Embouts à souder
Raccordi a saldare

Tuercas BSP Microfundido AISI-316

Micro-casting BSP nuts AISI-316

Écrous BSP en acier moulé AISI-316

Dadi BSP microfusi AISI-316

ROSCA THREAD	Referencia Part n°	€
2" 1/2 BSP	**Z127040**	-
3" BSP	**Z127048**	-
4" BSP	**Z127064**	-

Cono ajuste BSP 60° con guía

Welding nipple with 60° cone for BSP nut with guide

Collet à souder BSP cône 60° avec guide

Ogiva a saldare cono 60° con guida per dado BSP

DN	ROSCA THREAD	Referencia Part n°	€
2"1/2	2"1/2 BSP	**Z127840**	-
3"	3" BSP	**Z127848**	-
4"	4" BSP	**Z127864**	-

Macho BSPT soldar microfundido AISI-316

Micro-casting BSPT welding male AISI-316

Mâle BSPT à souder en acier moulé AISI-316

Maschio BSPT a saldare microfuso AISI-316

DN	ROSCA THREAD	Referencia Part n°	€
2"1/2	2"1/2 BSPT	**ZM103240**	-
3"	3" BSPT	**ZM103248**	-
4"	4" BSPT	**ZM103264**	-

Racores soldables

Welding fittings
Embouts à souder
Raccordi a saldare

Tuerca cono ajuste BSP

BSP Nut for welding 60° cone nipple

Écrou gaz pour collet à souder

Dado BSP per ogiva a saldare cono 60°

ROSCA THREAD	Referencia Part n°	€
1/4" BSP	**Z127004**	-
3/8" BSP	**Z127006**	-
1/2" BSP	**Z127008**	-
3/4" BSP	**Z127012**	-
1" BSP	**Z127016**	-
1"1/4 BSP	**Z127020**	-
1"1/2 BSP	**Z127024**	-
2" BSP	**Z127032**	-

Cono ajuste BSP 60°

Welding nipple BSP 60°

Collet à souder BSP cône 60°

Ogiva a saldare BSP

ROSCA THREAD	Referencia Part n°	€
1/4" BSP	**Z127304**	-
3/8" BSP	**Z127306**	-
1/2" BSP	**Z127308**	-
3/4" BSP	**Z127312**	-
1" BSP	**Z127316**	-
1"1/4 BSP	**Z127320**	-
1"1/2 BSP	**Z127324**	-
2" BSP	**Z127332**	-

Cono ajuste BSP asiento plano

Welding nipple BSP flat seat

Collet à souder BSP fond plat

Ogiva a saldare sede piana

ROSCA THREAD	Ø EXT. Ø OUTER	Referencia Part n°	€
1"1/4 BSP	33	**Z127420**	-
1"1/4 BSP	33	**Z127920**	-

Hasta fin de existencias / *Until end of stock* / Jusqu´à la fin du stock / *Fino ad esaurimento*

Z127920 con guia. / *Z127920 with guide* / Z127920 avec guide. / *Z127920 con guida*

Cono ajuste JIC 37° con guía

Welding nipple for JIC 37° with guide

Collet à souder femelle JIC cône 37° avec guide

Ogiva a saldare cono JIC 37° con guida

ROSCA THREAD	DN	Referencia Part n°	€
7/16" 20h UNF	1/4"	**Z12770704**	-
1/2" 20h UNF	1/4"	**Z12770804**	-
9/16" 18h UNF	3/8"	**Z12770906**	-
3/4" 16h UNF	3/8"	**Z12771206**	-
7/8" 14h UNF	5/8"	**Z12771410**	-
1"1/16 12h UN	3/4"	**Z12771712**	-

Hasta fin de existencias / *Until end of stock* / Jusqu´à la fin du stock / *Fino ad esaurimento*

Tuercas JIC

JIC nut

Écrou JIC

Dado JIC

TUBO PIPE		ROSCA THREAD	Referencia Part n°	€
6	1/4"	7/16" 20h UNF	**ZS11006**	*
8	5/16"	1/2" 20h UNF	**ZS11008**	*
10	3/8"	9/16" 18h UNF	**ZS11010**	*
12	1/2"	3/4" 16h UNF	**ZS11012**	*
14-15-16	5/8"	7/8" 14h UNF	**ZS11016**	*
18-20	-	1"1/16 12h UN	**ZS11020**	*
-	3/4"	1"1/16 12h UNF	**ZS11020W**	*
25	1"	1"5/16 12h UN	**ZS11025**	*
30-32	1 1/4"	1"5/8 12h UN	**ZS11032**	*
38	1 1/2"	1"7/8 12h UN	**ZS11038**	*

***Ver precios en p.125 (R. JIC)** / **See prices in p.125 (JIC Fittings)* / *Prix à la page 125 (R. JIC) / **Vedere prezzi p.125 (R. JIC)*

Racores soldables

Welding fittings
Embouts à souder
Raccordi a saldare

Unión 3 piezas hembra-soldar FIG.340HS microfundido

Union 3 fem. welding pieces fig.340hs micro-casting
Union 3 pcs fem. à souder fig.340hs inox acier moulé
Unione a 3 pezzi f.saldare fig.340hs inox microfusione

ROSCA THREAD	Referencia Part n°	€
1/4"	ZFIG34004HS	*
3/8"	ZFIG34006HS	*
1/2"	ZFIG34008HS	*
3/4"	ZFIG34012HS	*
1"	ZFIG34016HS	*
1" 1/4	ZFIG34020HS	*
1" 1/2	ZFIG34024HS	*
2"	ZFIG34032HS	*

***Ver precios en p.232** / **See prices p.232* / **Voir prix p.232* / **Vedere prezzi p.232*

Unión 3 piezas soldar FIG.340S microfundido

Union 3 welding pieces fig. 340s micro-casting
Union 3 pièces à souder fig. 340s inox acier moulé
Unione a 3 pezzi a saldare fig.340s inox microfusione

ROSCA THREAD	Referencia Part n°	€
1/4"	ZFIG34004S	*
3/8"	ZFIG34006S	*
1/2"	ZFIG34008S	*
3/4"	ZFIG34012S	*
1"	ZFIG34016S	*
1" 1/4	ZFIG34020S	*
1" 1/2	ZFIG34024S	*
2"	ZFIG34032S	*

***Ver precios en p.232** / **See prices p.232* / **Voir prix p.232* / **Vedere prezzi p.232*

Unión 3 piezas macho-soldar FIG.341MS microfundido

Union 3 welding male pieces fig.341ms micro-casting
Union 3 pcs mâle à souder fig.341ms inox acier moulé
Unione a 3 pezzi m.saldare fig.341ms inox microfusione

ROSCA THREAD	Referencia Part n°	€
1/4"	ZFIG34104MS	*
3/8"	ZFIG34106MS	*
1/2"	ZFIG34108MS	*
3/4"	ZFIG34112MS	*
1"	ZFIG34116MS	*
1" 1/4	ZFIG34120MS	*
1" 1/2	ZFIG34124MS	*
2"	ZFIG34132MS	*

***Ver precios en p.232** / **See prices p.232* / **Voir prix p.232* / **Vedere prezzi p.232*

***Consultar** / On request / **Sur demande** / Su richiesta

Bridas soldables

Welding flanges
Brides à souder
Flangia a saldare

Brida fija soldable PN10/16 DIN 2633

Welding forged flange DIN 2633 PN 10/16

Bride fixe à souder DIN 2633 PN10/16

Flangia forgiata a saldare DIN 2633 PN 10/16

DN	Referencia Part n°	€
15-1/2"	**ZBPN16263308**	-
20-3/4"	**ZBPN16263312**	-
25-1"	**ZBPN16263316**	-
32-1"1/4	**ZBPN16263320**	-
40-1"1/2	**ZBPN16263324**	-
50-2"	**ZBPN16263332**	-
65-2"1/2	**ZBPN16263340**	-
80-3"	**ZBPN16263348**	-
100-4"	**ZBPN16263364**	-

Brida fija soldable PN40 DIN 2635

Welding forged flange DIN 2635 PN 40

Bride fixe à souder DIN 2635 PN 40

Flangia forgiata a saldare DIN 2635 PN 40

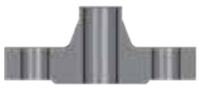

DN	Referencia Part n°	€
13-3/8"	**ZBPN40263506***	-
15-1/2"	**ZBPN40263508**	-
20-3/4"	**ZBPN40263512**	-
25-1"	**ZBPN40263516**	-
32-1"1/4	**ZBPN40263520**	-
40-1"1/2	**ZBPN40263524**	-
50-2"	**ZBPN40263532**	-
65-2"1/2	**ZBPN40263540**	-
80-3"	**ZBPN40263548**	-
100-4"	**ZBPN40263564**	-

***Hasta fin de existencias** / *Until end of stock* / Jusqu´à la fin du stock / *Fino ad esaurimento*

Brida fija ANSI-ASA 150 LBS

Flange ANSI-ASA Welding Neck 150 LBS

Bride ANSI-ASA Welding Neck 150 LBS

Flangia ANSI-ASA a saldare 150 LBS

DN	Referencia Part n°	€
15-1/2"	**ZBANSAWN15008**	-
20-3/4"	**ZBANSAWN15012**	-
25-1"	**ZBANSAWN15016**	-
32-1"1/4	**ZBANSAWN15020**	-
40-1"1/2	**ZBANSAWN15024**	-
50-2"	**ZBANSAWN15032**	-
65-2"1/2	**ZBANSAWN15040**	-
80-3"	**ZBANSAWN15048**	-
100-4"	**ZBANSAWN15064**	-

Brida fija ANSI-ASA 350 LBS

FLANGE ANSI-ASA Welding Neck 300 LBS

Bride ANSI-ASA Welding Neck 300 LBS

Flangia ANSI-ASA a saldare 300 LBS

DN	Referencia Part n°	€
15-1/2"	**ZBANSAWN30008**	-
20-3/4"	**ZBANSAWN30012**	-
25-1"	**ZBANSAWN30016**	-
32-1"1/4	**ZBANSAWN30020**	-
40-1"1/2	**ZBANSAWN30024**	-
50-2"	**ZBANSAWN30032**	-
65-2"1/2	**ZBANSAWN30040**	-
80-3"	**ZBANSAWN30048**	-
100-4"	**ZBANSAWN30064**	-

Bridas soldables

Welding flanges
Brides à souder
Flangia a saldare

Brida loca PN10 DIN 2642

Welding forged slip on flange DIN 2642 PN 10

Bride tournante à souder DIN 2642 PN 10

Flangia girevole a saldare DIN 2642 PN 10

DN	Referencia Part n°	€
15-1/2"	**ZBPN10264208**	-
20-3/4"	**ZBPN10264212**	-
25-1"	**ZBPN10264216**	-
32-1"1/4	**ZBPN10264220**	-
40-1"1/2	**ZBPN10264224**	-
50-2"	**ZBPN10264232**	-
65-2"1/2	**ZBPN10264240**	-
80-3"	**ZBPN10264248**	-
100-4"	**ZBPN10264264**	-

Aro para brida DIN 2642

Ring for flange DIN 2642

Collet épais pour bride DIN 2642

Anello per flangia DIN 2642

DN	Referencia Part n°	€
1/2"	**ZABARO264208**	-
3/4"	**ZABARO264212**	-
1"	**ZABARO264216**	-
1"1/4	**ZABARO264220**	-
1"1/2	**ZABARO264224**	-
2"	**ZABARO264232**	-
2"1/2	**ZABARO264240**	-
3"	**ZABARO264248**	-
4"	**ZABARO264264**	-

Tubo para soldar bridas ANSI-DIN

Tube for welding flanges ANSI-DIN

Tube à souder brides ANSI-DIN

Tubo per flangia a saldare ANSI-DIN

DN	Referencia Part n°	€
3/8"	**ZBTUBO06**	-
1/2"	**ZBTUBO08**	-
3/4"	**ZBTUBO12**	-
1"	**ZBTUBO16**	-
1"1/4	**ZBTUBO20**	-
1"1/2	**ZBTUBO24**	-
2"	**ZBTUBO32**	-
2"1/2	**ZBTUBO40**	-
3"	**ZBTUBO48**	-
4"	**ZBTUBO64**	-

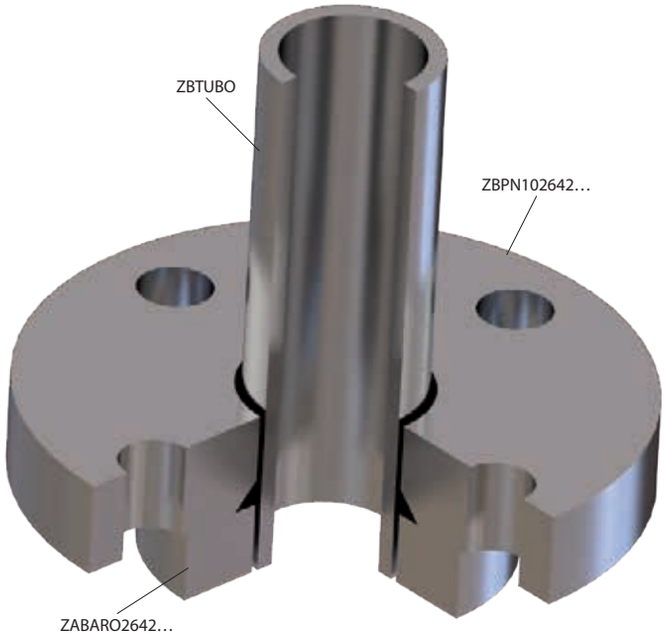

Bridas soldables

Welding flanges
Brides à souder
Flangia a saldare

Brida plana PN40 DIN 2656

Welding forged flange DIN 2656 PN 40

Bride tournante à souder DIN 2656 PN 40

Flangia girevole a saldare DIN 2656 PN 40

DN	Referencia Part n°	€
15-1/2"	**ZBPN40265608**	-
20-3/4"	**ZBPN40265612**	-
25-1"	**ZBPN40265616**	-
32-1"1/4	**ZBPN40265620**	-
40-1"1/2	**ZBPN40265624**	-
50-2"	**ZBPN40265632**	-
65-2"1/2	**ZBPN40265640**	-
80-3"	**ZBPN40265648**	-
100-4"	**ZBPN40265664**	-

Aro para brida DIN 2656

Ring for flange DIN 2656

Collet épais pour bride DIN 2656

Anello per flangia DIN 2656

DN	Referencia Part n°	€
1/2"	**ZABARO265608**	-
3/4"	**ZABARO265612**	-
1"	**ZABARO265616**	-
1"1/4	**ZABARO265620**	-
1"1/2	**ZABARO265624**	-
2"	**ZABARO265632**	-
2"1/2	**ZABARO265640**	-
3"	**ZABARO265648**	-

Tubo para soldar bridas ANSI-DIN

Tube for welding flanges ANSI-DIN

Tube à souder brides ANSI-DIN

Tubo per flangia a saldare ANSI-DIN

DN	Referencia Part n°	€
3/8"	**ZBTUBO06**	-
1/2"	**ZBTUBO08**	-
3/4"	**ZBTUBO12**	-
1"	**ZBTUBO16**	-
1"1/4	**ZBTUBO20**	-
1"1/2	**ZBTUBO24**	-
2"	**ZBTUBO32**	-
2"1/2	**ZBTUBO40**	-
3"	**ZBTUBO48**	-
4"	**ZBTUBO64**	-

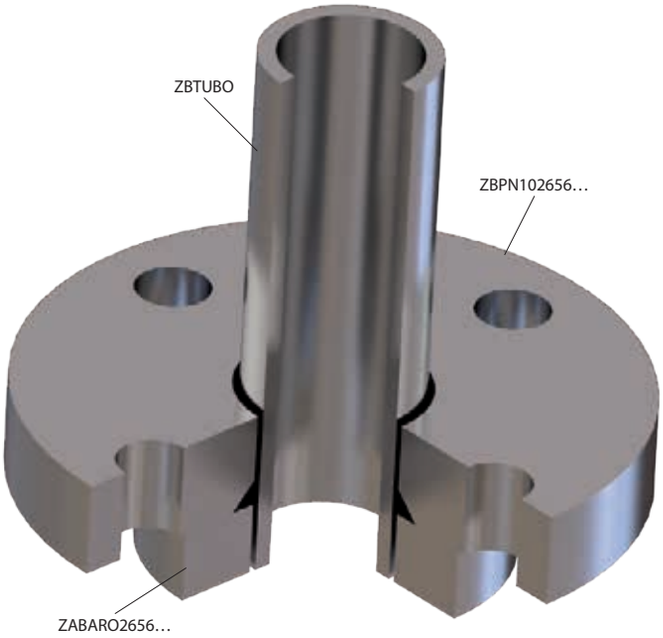

Bridas soldables

Welding flanges
Brides à souder
Flangia a saldare

Brida plana ANSI-ASA 150 LBS

Swivel flange ANSI-ASA 150 LBS

Bride tournante ANSI-ASA 150 LBS

Flangia girevole ANSI-ASA 150 LBS

DN	Referencia Part n°	€
15-1/2"	ZBANSASO15008	-
20-3/4"	ZBANSASO15012	-
25-1"	ZBANSASO15016	-
32-1"1/4	ZBANSASO15020	-
40-1"1/2	ZBANSASO15024	-
50-2"	ZBANSASO15032	-
65-2"1/2	ZBANSASO15040	-
80-3"	ZBANSASO15048	-
100-4"	ZBANSASO15064	-

Aro para brida ANSI-ASA

Ring for flange ANSI-ASA

Collet épais pour bride ANSI-ASA

Anello per flangia ANSI-ASA

DN	Referencia Part n°	€
1/2"	ZABAROANSA08	-
3/4"	ZABAROANSA12	-
1"	ZABAROANSA16	-
1"1/4	ZABAROANSA20	-
1"1/2	ZABAROANSA24	-
2"	ZABAROANSA32	-
2"1/2	ZABAROANSA40	-
3"	ZABAROANSA48	-
4"	ZABAROANSA64	-

Brida plana ANSI-ASA 300 LBS

Swivel flange ANSI-ASA 300 LBS

Bride tournante ANSI-ASA 300 LBS

Flangia girevole ANSI-ASA 300 LBS

DN	Referencia Part n°	€
15-1/2"	ZBANSASO30008	-
20-3/4"	ZBANSASO30012	-
25-1"	ZBANSASO30016	-
32-1"1/4	ZBANSASO30020	-
40-1"1/2	ZBANSASO30024	-
50-2"	ZBANSASO30032	-
65-2"1/2	ZBANSASO30040	-
80-3"	ZBANSASO30048	-
100-4"	ZBANSASO30064	-

Tubo para soldar bridas ANSI-DIN

Tube for welding flanges ANSI-DIN

Tube à souder brides ANSI-DIN

Tubo per flangia a saldare ANSI-DIN

DN	Referencia Part n°	€
3/8"	ZBTUBO06	-
1/2"	ZBTUBO08	-
3/4"	ZBTUBO12	-
1"	ZBTUBO16	-
1"1/4	ZBTUBO20	-
1"1/2	ZBTUBO24	-
2"	ZBTUBO32	-
2"1/2	ZBTUBO40	-
3"	ZBTUBO48	-
4"	ZBTUBO64	-

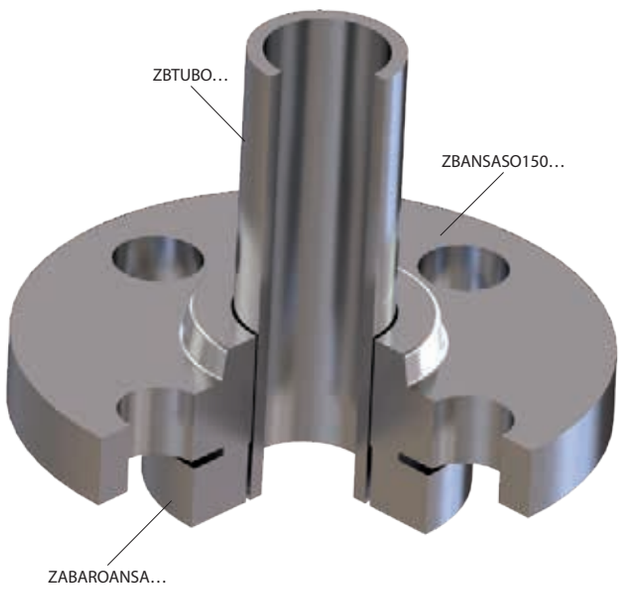

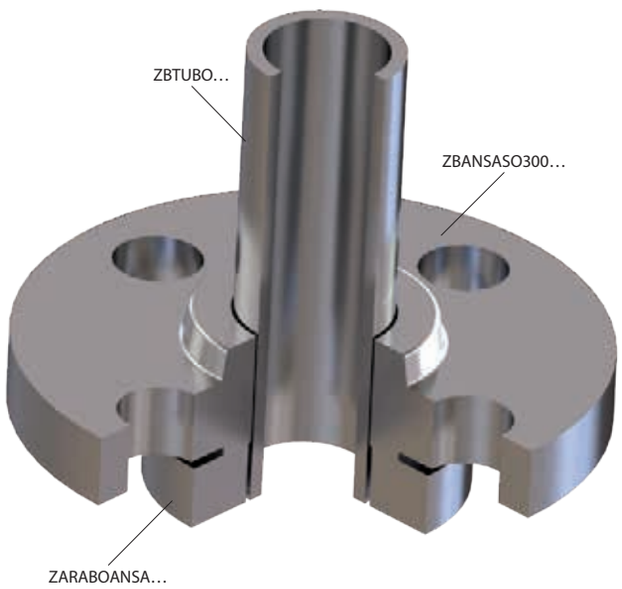

DICSA

Servicio Integral para hacer Crecer tu Negocio.

Complete Service to make your business grow

Fabricación - Manufacture
Logística - Logistics
Área Calidad - Quality Department
Área Técnica - Technical Department
Taller Hidráulica - Hydraulic Workshop
Taller Latiguillos - Hose Assembly Workshop
Taller Soldadura - Welding Workshop
Servicios Comerciales - Commercial Services
Plataforma Digital - Digital Platform

www.dicsaes.com

DICSA

Racores industria alimentaria 213
Food industry fittings
Raccords alimentaires
Raccordi alimentari

Serie Camlock DIN 2828 221
DIN 2828 Camlock Fittings
Raccords Camlock DIN 2828
Camlock DIN 2828

Acoples GUILLEMIN NF E-29572 225
GUILLEMIN NF E-29572 Fittings
Raccords GUILLEMIN NF E-29572
Raccordi GUILLEMIN NF E-29572

Acoples TW (Tankwagen) DIN 28450 227
TW (Tankwagen) DIN 28450 Fittings
Raccords TW (Tankwagen) DIN 28450
Raccordi TW (Tankwagen) DIN 28450

Accesorios inox para racor industrial 228
Stainless Steel accessories for industrial fitting
Accessoires acier inox pour raccord industriel
Accessori in acciaio inossidabile per raccordo industriale

Racores baja presión 150 LBS 229
Screw low pressure fittings 150 LBS
Raccords basse pression 150 LBS
Raccordi bassa pressione 150 LBS

06

RACORES INDUSTRIALES

Industrial fittings

Raccords industriels

Raccordi industriali

Racores industria alimentaria

Food industry fittings
Raccords alimentaires
Raccordi alimentari

Casquillos para prensar ▪ Crimping ferrules ▪ Jupes à sertir ▪ Boccole a pressare | 213

81042

Racores SMS ▪ SMS Unions ▪ Raccords SMS ▪ Raccordi SMS | 214

ZRA200

ZRA212

ZSMS H

ZSMS S

ZSMS M

Z SMS BN

JSMSS

JSMSP

Racores Tri-Clamp ▪ Clamp Unions ▪ Raccords Tri-Clamp ▪ Raccordi Tri-Clamp | 216

ZTC

ZC

JCLAMPS

JCLAMPP

ZAC1P

ZPC

Racores DIN 11851 ▪ DIN 11851 Unions ▪ Raccords DIN 11851 ▪ Raccordi DIN 11851 | 217

ZRA100

ZRA112

ZDIN H

Z DIN BN

ZDIN S

ZDIN M

JDINS

JDINP

Racores Macon ▪ Macon Unions ▪ Raccords Macon ▪ Raccordi Macon | 218

ZRA300

ZRA312

ZMAC H

Racores alimentarios para manguera PTFE Serie STD ▪ Food industry fittings for PTFE hose STD Series ▪ Raccords alimentaires pour tuyau PTFE Série STD ▪ Raccordi alimentari per tubo PTFE Serie STD | 219

ZRA250

ZRA150

ZRA252

ZRA152

ZTCS

81040

81041

Racores RJT ▪ RJT Fittings ▪ Raccords RJT ▪ Raccordi RJT | 220

ZRJT H

ZRJT M

ZRJT WL

JRJT NBR

Serie Camlock DIN 2828

DIN 2828 Camlock Fittings
Raccords Camlock DIN 2828
Camlock DIN 2828

Racores Camlock AISI 316 ▪ Camlock Unions AISI 316 ▪ Raccords Camlock AISI 316 ▪ Raccordi Camlock AISI 316 | 221

ZA ZB ZC ZD ZE ZF ZDC ZDP JCAMNBR ZABW

ZDBW JCAMS ZA..NPT ZB..NPT ZD..NPT ZF..NPT

Serie Autolock AISI 316

Autolock Unions AISI 316
Raccords Autolock AISI 316
Raccordi Autolock AISI 316

Racores Autolock AISI 316 ▪ Autolock Unions AISI 316 ▪ Raccords Autolock AISI 316 ▪ Raccordi Autolock AISI 316 | 224

ZB S ZC S ZD S ZDC S

Acoples GUILLEMIN NF E-29572

GUILLEMIN NF E-29572 Fittings
Raccords GUILLEMIN NF E-29572
Raccordi GUILLEMIN NF E-29572

GUILLEMIN inox ▪ GUILLEMIN Stainless Steel ▪ GUILLEMIN acier inox ▪ GUILLEMIN acciao inossidabile | 225

ZGU01C ZGU02C ZGU04C ZGU01S ZGU02S ZGU03C ZGU05C ZGU06C

Acoples TW (Tankwagen) DIN 28450

TW (Tankwagen) DIN 28450 Fittings
Raccords TW (Tankwagen) DIN 28450
Raccordi TW (Tankwagen) DIN 28450

TW (Tankwagen) inox ▪ TW Stainless Steel ▪ TW acier inox ▪ TW Acciao Inossidabile | 227

ZMK ZVK ZMB ZVB ZMKS ZVKS

Accesorios inox para racor industrial

Stainless Steel accessories for industrial fitting
Accessoires acier inox pour raccord industriel
Accessori in acciaio inossidabile per raccordo industriale

Campana inox para racor industrial ▪ Stainless Steel Crimping Ferrule for industrial fitting ▪ Jupe pour raccord industriel acier inox ▪ Boccola in acciaio inossidabile per raccordo industriale | 228

ZCA

Abrazadera inox para racor industrial ▪ Stainless Steel clamp for industrial fitting ▪ Collier pour raccord industriel acier inox ▪ Collare in acciao inossidabile per raccordo industriale | 228

ZAB01

ZAB02

Racores baja presión 150 LBS

Screw low pressure fittings 150 LBS
Raccords basse pression 150 LBS
Raccordi bassa pressione 150 LBS

150 LBS Microfundido ▪ Screwed fittings low pressure 150 LBS ▪ Adapteurs basse pression 150 LBS ▪ Raccordi bassa pressione | 229

ZFIG399

ZFIG150

ZFIG290

ZFIG280

ZFIG245

ZFIG312

ZFIG300

ZFIG270

ZFIG291

ZFIG301

ZFIG241

ZFIG531

ZFIG240

ZFIG090

ZFIG120

ZFIG092

ZFIG130

ZFIG180

ZFIG340

ZFIG341

ZFIG149

150 LBS Soldables ▪ Welding fittings low pressure 150 LBS ▪ Raccords à souder basse pression 150 LBS ▪ Raccordi bassa pressione per saldare 150 LBS | 232

ZFIG340...HS

ZFIG340...S

ZFIG341...MS

150 LBS Válvulas ▪ 150 LBS fittings Valves ▪ Raccords Vannes150 LBS ▪ Raccordi Valvole 150LBS | 233

BP2V3P

BP2V

Racores industria alimentaria

Food industry fittings
Raccords alimentaires
Raccordi alimentari

Casquillos para mangueras alimentarias

Food industry hoses ferrules

Jupes à sertir tuyaux alimentaires

Boccola a pressare per tubi alimentari

DN	Ø MANGUERA Ø HOSE	Referencia Part n°	€
13-1/2"	23	**810421324**	-
19-3/4"	32	**810421933**	-
25-1"	39	**810422540**	-
32-1"1/4	48	**810423248**	-
38-1"1/2	52	**810423852**	-
38-1"1/2	56	**810423857**	-
40-1"1/2	54	**810424055**	-
40-1"1/2	60	**810424061**	-
50-2"	63	**810425064**	-
50-2"	68	**810425069**	-
50-2"	73	**810425073**	-
65-2"1/2	79	**810426580**	-
65-2"1/2	93	**810426593**	-
70-3"	89	**810427090**	-
75-3"	94	**810427595**	-
75-3"	106	**8104275107**	-
100-4"	122	**81042100123**	-
100-4"	134	**81042100135**	-

FOOD INDUSTRY HOSES | MANGUERAS ALIMENTARIAS

Hoses suitable for suction and discharge:
Milk, wine, oils, fatty foods, alcohol drinks (max 40%), etc. /
Mangueras aptas para productos alimentarios de aspiración e impulsión:
Leche, vino, aceites, alimentos grasos, bebidas alcohol (máx. 40%), etc.

Ver precios en Catálogo Conducciones. | See prices in Connectors Catalogue.

Racores industria alimentaria

Food industry fittings
Raccords alimentaires
Raccordi alimentari

Hembras giratorias SMS

Swivel female SMS

Raccord femelle tournante SMS

Femmina girevole SMS

ROSCA THREAD	DN	Referencia Part n°	€
40x1/6"	25	**ZRA2004025**	-
48x1/6"	32	**ZRA2004832**	-
60x1/6"	38	**ZRA2006038**	-
60x1/6"	40	**ZRA2006040**	-
70x1/6"	50	**ZRA2007050**	-
85x1/6"	63	**ZRA2008563**	-
85x1/6"	65	**ZRA2008565**	-
98x1/6"	70	**ZRA2009870**	-
98x1/6"	75	**ZRA2009875**	-
98x1/6"	80	**ZRA2009880**	-
125x1/4"	100	**ZRA200125100**	-
132x1/4"	100	**ZRA200132100**	-

Machos fijos SMS

Fixed male SMS

Raccord mâle SMS

Maschio fisso SMS

ROSCA THREAD	DN	Referencia Part n°	€
40x1/6"	25	**ZRA2124025**	-
48x1/6"	32	**ZRA2124832**	-
60x1/6"	38	**ZRA2126038**	-
60x1/6"	40	**ZRA2126040**	-
70x1/6"	50	**ZRA2127050**	-
85x1/6"	63	**ZRA2128563**	-
85x1/6"	65	**ZRA2128565**	-
98x1/6"	70	**ZRA2129870**	-
98x1/6"	75	**ZRA2129875**	-
98x1/6"	80	**ZRA2129880**	-
125x1/4"	100	**ZRA212125100**	-
132x1/4"	100	**ZRA212132100**	-

Tuercas SMS

Nuts SMS

Écrou SMS

Dadi SMS

ROSCA THREAD	DN	Referencia Part n°	€
40x1/6"	25	**ZSMS H 25**	-
48x1/6"	32	**ZSMS H 32**	-
60x1/6"	38	**ZSMS H 38**	-
70x1/6"	51	**ZSMS H 51**	-
85x1/6"	63	**ZSMS H 63**	-
98x1/6"	76	**ZSMS H 76**	-
125x1/4"	104	**ZSMS H 104**	-
132x1/4"	104	**ZSMS H 105**	-

Conos soldables SMS

Liner to weld SMS

Douilles à souder SMS

Sede a saldare per femmina SMS

DN	Referencia Part n°	€
25	**ZSMS S 25**	-
32	**ZSMS S 32**	-
38	**ZSMS S 38**	-
51	**ZSMS S 51**	-
63	**ZSMS S 63**	-
76	**ZSMS S 76**	-
104	**ZSMS S 104**	-

Machos soldables SMS

Weld male SMS

Nez à souder SMS

Maschio a saldare SMS

ROSCA THREAD	DN	Referencia Part n°	€
40x1/6"	25	**ZSMS M 25**	-
48x1/6"	32	**ZSMS M 32**	-
60x1/6"	38	**ZSMS M 38**	-
70x1/6"	51	**ZSMS M 51**	-
85x1/6"	63	**ZSMS M 63**	-
98x1/6"	76	**ZSMS M 76**	-
125x1/4"	104	**ZSMS M 104**	-

Racores industria alimentaria

Food industry fittings
Raccords alimentaires
Raccordi alimentari

Tapones SMS

Blind round nut SMS

Ecrou Bouchon Avec Chainette

Dado tondo cieco SMS

DN	ROSCA THREAD	Referencia Part n°	€
25	40X1/6"	**Z SMS BN 25**	-
38	60X1/6"	**Z SMS BN 38**	-
51	70X1/6"	**Z SMS BN 51**	-
63	85X1/6"	**Z SMS BN 63**	-
76	98X1/6"	**Z SMS BN 76**	-
104	125X1/4"	**Z SMS BN 104**	-

Junta SMS silicona

Silicone joint for SMS

Joint silicône pour SMS

Guarnizione in silicone per SMS

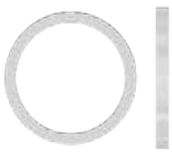

DN	Referencia Part n°	€
25	**JSMSS 25**	-
32	**JSMSS 32**	-
38	**JSMSS 38**	-
51	**JSMSS 51**	-
63	**JSMSS 63**	-
76	**JSMSS 76**	-
104	**JSMSS 104**	-

Juntas SMS PTFE

PTFE Joint for SMS

Joint PTFE pour SMS

Guarnizione in PTFE per SMS

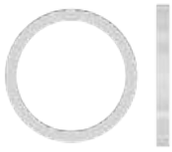

DN	Referencia Part n°	€
25	**JSMSP 25**	-
32	**JSMSP 32**	-
38	**JSMSP 38**	-
51	**JSMSP 51**	-
63	**JSMSP 63**	-
76	**JSMSP 76**	-

Racores industria alimentaria

Food industry fittings
Raccords alimentaires
Raccordi alimentari

Tri-Clamp ISO 2852

Tri-Clamp ISO 2852

Raccord Tri-Clamp ISO 2852

Tri-Clamp ISO 2852 per tubo flessibile

Ø	DN		Referencia Part n°	€
25	12		ZTC2512	-
25	19	NEW	ZTC2519	-
34	12		ZTC3412	-
34	19		ZTC3419	-
50,5	19		ZTC5019	-
50,5	25		ZTC5025	-
50,5	32		ZTC5032	-
50,5	38		ZTC5038	-
50,5	40		ZTC5040	-
64	38		ZTC6438	-
64	40		ZTC6440	-
64	50		ZTC6450	-
77,5	50		ZTC7750	-
77,5	65		ZTC7763	-
91	65		ZTC9165	-
91	75		ZTC9175	-

Tri-Clamp para soldar en tubo

Welding Tri-Clamp for pipe

Raccord Tri-Clamp à souder pour tube

Tri-Clamp a saldare per tubo rigido

Ø	DN	Referencia Part n°	€
25	12	ZC25-12	-
34	12	ZC34-12	-
34	18	ZC34-18	-
50.5	18	ZC50-18	-
50.5	25	ZC50-25	-
50.5	33.7	ZC50-33.7	-
50.5	38	ZC50-38	-
64	38	ZC64-38	-
64	51	ZC64-51	-
91	65	ZC91-65	-

Juntas para Clamp Silicona

Joint for silicone clamp

Joint pour clamp silicône

Guarnizione per clamp Silicone

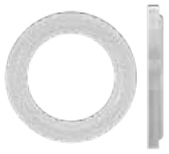

Ø	Referencia Part n°	€
25	JCLAMPS 25	-
34	JCLAMPS 34	-
50	JCLAMPS 50	-
64	JCLAMPS 64	-
77	JCLAMPS 77	-
91	JCLAMPS 91	-

Juntas para Clamp PTFE

Joint for PTFE clamp

Joint pour clamp PTFE

Guarnizione per clamp PTFE

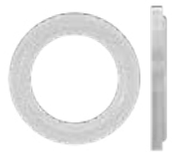

Ø	Referencia Part n°	€
25	JCLAMPP 25	-
34	JCLAMPP 34	-
50	JCLAMPP 50	-
64	JCLAMPP 64	-
77	JCLAMPP 77	-
91	JCLAMPP 91	-

Abrazaderas Tri-clamp con 1 pin

Tri-Clamp with 1 pin

Collier Tri-Clamp avec 1 pin

Collare Tri-Clam con 1 pim

Ø	Referencia Part n°	€
25	ZAC1P25	-
34	ZAC1P34	-
50	ZAC1P50	-
64	ZAC1P64	-
77	ZAC1P77	-
91	ZAC1P91	-

Tri-Clamp Tapa

Tri-Clamp cover

Tri-Clamp Couvercle

Tri-Clamp copertura

Ø	Referencia Part n°	€
25	ZPC25	-
34	ZPC34	-
50.5	ZPC50	-
64	ZPC64	-
77.5	ZPC77	-
91	ZPC91	-

Racores industria alimentaria

Food industry fittings
Raccords alimentaires
Raccordi alimentari

Hembras giratorias DIN 11851

Swivel female DIN 11851

Raccord femelle tournante DIN 11851

Femmina girevole DIN 11851

ROSCA THREAD	DN	Referencia Part n°	€
44x1/6"	20	ZRA1004420	-
52x1/6"	25	ZRA1005225	-
58x1/6"	32	ZRA1005832	-
65x1/6"	38	ZRA1006538	-
65x1/6"	40	ZRA1006540	-
78x1/6"	50	ZRA1007850	-
95x1/6"	63	ZRA1009563	-
95x1/6"	65	ZRA1009565	-
110x1/4"	75	ZRA10011075	-
110x1/4"	80	ZRA10011080	-
130x1/4"	100	ZRA100130100	-

Machos fijos DIN 11851

Fixed male DIN 11851

Raccord mâle DIN 11851

Maschio fisso DIN 11851

ROSCA THREAD	DN	Referencia Part n°	€
52x1/6"	25	ZRA1125225	-
58x1/6"	32	ZRA1125832	-
65x1/6"	38	ZRA1126538	-
65x1/6"	40	ZRA1126540	-
78x1/6"	50	ZRA1127850	-
95x1/6"	63	ZRA1129563	-
95x1/6"	65	ZRA1129565	-
110x1/4"	75	ZRA11211075	-
110x1/4"	80	ZRA11211080	-
130x1/4"	100	ZRA112130100	-

Tuercas DIN 11851

Nuts DIN 11851

Écrous DIN 11851

Dado DIN 11851

ROSCA THREAD	DN	Referencia Part n°	€
34x1/8"	16	ZDIN H 16	-
44x1/6"	20	ZDIN H 20	-
52x1/6"	25	ZDIN H 25	-
58x1/6"	32	ZDIN H 32	-
65x1/6"	40	ZDIN H 40	-
78x1/6"	50	ZDIN H 50	-
95x1/6"	65	ZDIN H 65	-
110x1/4"	80	ZDIN H 80	-
130x1/4"	100	ZDIN H 100	-

Tapones DIN 11851

DIN 11851 Blind round nut

DIN 11851 Ecrou Bouchon Avec Chainette

DIN 11851 Dado tondo cieco

DN	ROSCA	Referencia Part n°	€
20	44X1/6"	Z DIN BN 20	-
25	52X1/6"	Z DIN BN 25	-
32	58X1/6"	Z DIN BN 32	-
40	65X1/6"	Z DIN BN 40	-
50	78X1/6"	Z DIN BN 50	-
65	95X1/6"	Z DIN BN 65	-
80	110X1/4"	Z DIN BN 80	-

Conos soldables DIN 11851

Liner to weld DIN 11851

Douilles à souder DIN 11851

Ogiva a saldare per dado DIN 11851

DN	Referencia Part n°	€
16	ZDIN S 16	-
20	ZDIN S 20	-
25	ZDIN S 25	-
32	ZDIN S 32	-
40	ZDIN S 40	-
50	ZDIN S 50	-
65	ZDIN S 65	-
75/80	ZDIN S 80	-
100	ZDIN S 100	-

Machos soldables DIN 11851

Weld male DIN 11851

Nez à souder DIN 11851

Maschio a saldare DIN 11851

ROSCA THREAD	DN	Referencia Part n°	€
34x1/8"	16	ZDIN M 16	-
44x1/6"	20	ZDIN M 20	-
52x1/6"	25	ZDIN M 25	-
58x1/6"	32	ZDIN M 32	-
65x1/6"	40	ZDIN M 40	-
78x1/6"	50	ZDIN M 50	-
95x1/6"	65	ZDIN M 65	-
110x1/4"	75/80	ZDIN M 80	-
130x1/4"	100	ZDIN M 100	-

Racores industria alimentaria

Food industry fittings
Raccords alimentaires
Raccordi alimentari

Juntas DIN 11851 silicona

Silicone joint for DIN 11851

Joint silicône pour DIN 11851

Guarnizione in silicone per DIN 11851

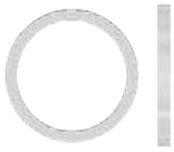

DN	Referencia Part n°	€
20	**JDINS 20**	-
25	**JDINS 25**	-
32	**JDINS 32**	-
40	**JDINS 40**	-
50	**JDINS 50**	-
65	**JDINS 65**	-
80	**JDINS 80**	-

Juntas DIN 11851 PTFE

PTFE Joint for DIN 11851

Joint PTFE pour DIN 11851

Guarnizione in PTFE per DIN 11851

DN	Referencia Part n°	€
20	**JDINP 20**	-
25	**JDINP 25**	-
32	**JDINP 32**	-
40	**JDINP 40**	-
50	**JDINP 50**	-
65	**JDINP 65**	-
80	**JDINP 80**	-
100	**JDINP 100**	-

Hembras giratorias Macon

Swivel female Macon

Raccord femelle tournante Macon

Femmina girevole Macon

ROSCA THREAD	DN	Referencia Part n°	€
M55x3	38	**ZRA3005538**	-
M55x3	40	**ZRA3005540**	-
M67x3	50	**ZRA3006750**	-
M79x3,5	65	**ZRA3007965**	-
M90x3,5	65	**ZRA3009065**	-
M90x3,5	70	**ZRA3009070**	-
M90x3,5	80	**ZRA3009080**	-
M102x4	80	**ZRA30010280**	-

Machos fijos Macon

Male fixe Macon

Raccord mâle fixe Macon

Maschio fisso Macon

ROSCA THREAD	DN	Referencia Part n°	€
M55x3	38	**ZRA3125538**	-
M55x3	40	**ZRA3125540**	-
M67x3	50	**ZRA3126750**	-
M79x3,5	65	**ZRA3127965**	-
M90x3,5	70	**ZRA3129070**	-
M90x3,5	80	**ZRA3129080**	-
M102x4	80	**ZRA31210280**	-

Tuercas Macon

Macon nuts

Écrous à crans Macon

Dadi Macon

ROSCA THREAD	DN	Referencia Part n°	€
M55x3	40	**ZMAC H 40**	-
M67x3	50	**ZMAC H 50**	-
M79x3,5	60	**ZMAC H 60**	-
M90x3,5	70	**ZMAC H 70**	-
M102x4	80	**ZMAC H 80**	-
M125x4	100	**ZMAC H 100**	-

***Consultar** / On request / **Sur demande** / Su richiesta

Racores industria alimentaria

Food industry fittings
Raccords alimentaires
Raccordi alimentari

Hembras giratorias prensar SMS para PTFE Serie STD

Swivel female SMS for PTFE STD Series

Femelle tournante SMS pour PTFE Série STD

Femmina girevole SMS per tubo PTFE Serie STD

ROSCA THREAD	DN	Referencia Part n°	€
40x1/6"	1"	**ZRA2504016**	-
48x1/6"	1" 1/4	**ZRA2504820**	-
60x1/6"	1" 1/2	**ZRA2506024**	-
70x1/6"	2"	**ZRA2507032**	-
85x1/6"	2" 1/2	**ZRA2508540**	-

Hembras giratorias DIN 11851 para PTFE Serie STD

Swivel female DIN 11851 for PTFE hose STD Series

Raccord femelle tournante DIN 11851 pour PTFE Série STD

Femmina girevole DIN 11851 per tubo PTFE Serie STD

ROSCA THREAD	DN	Referencia Part n°	€
52x1/6"	1"	**ZRA1505216**	-
58x1/6"	1" 1/4	**ZRA1505820**	-
65x1/6"	1" 1/2	**ZRA1506524**	-
78x1/6"	2"	**ZRA1507832**	-
95x1/6"	2" 1/2	**ZRA1509540**	-

Machos SMS para PTFE Serie STD

Fixed male SMS for PTFE hose STD Series

Raccord mâle SMS pour PTFE Série STD

Maschio SMS per tubo PTFE Serie STD

ROSCA THREAD	DN	Referencia Part n°	€
40x1/6"	1"	**ZRA2524016**	-
48x1/6"	1" 1/4	**ZRA2524820**	-
60x1/6"	1" 1/2	**ZRA2526024**	-
70x1/6"	2"	**ZRA2527032**	-
85x1/6"	2" 1/2	**ZRA2528540**	-

Machos DIN 11851 para PTFE Serie STD

Fixed male DIN 11851 for PTFE hose STD Series

Raccord mâle DIN 11851 pour PTFE Série STD

Maschio DIN 11851 per tubo PTFE Serie STD

ROSCA THREAD	DN	Referencia Part n°	€
52x1/6"	1"	**ZRA1525216**	-
78x1/6"	2"	**ZRA1527832**	-
58x1/6"	1" 1/4	**ZRA1525820**	-
65x1/6"	1" 1/2	**ZRA1526524**	-
95x1/6"	2" 1/2	**ZRA1529540**	-

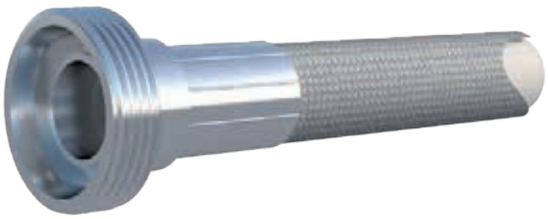

Racores Tri-Clamp Serie STD

Tri-Clamp Fittings STD Series

Raccords Tri-Clamp Série STD

Raccordi Tri-Clamp Serie STD

Ø	DN	Referencia Part n°	€
34	3/8"	**ZTCS3406**	-
50,5	3/4"	**ZTCS5012**	-
50,5	1"	**ZTCS5016**	-
50,5	1" 1/4	**ZTCS5020**	-
50,5	1" 1/2	**ZTCS5024**	-
64	1" 1/2	**ZTCS6424**	-
64	2"	**ZTCS6432**	-
77,5	2"	**ZTCS7732**	-

Casquillos PTFE liso

Ferrules for smooth PTFE

Jupes PTFE lisse

Boccole pressare per PTFE liscio

DN	Referencia Part n°	€
1/8"	**810400100**	-
3/16"	**810400300**	-
1/4"	**810400400**	-
5/16"	**810400500**	-
3/8"	**810400600**	-
1/2"	**810400800**	-
5/8"	**810401000**	-
3/4"	**810401200**	-
1"	**810401600**	-

*

Casquillos PTFE corrugado

Ferrules for convoluted PTFE

Jupes PTFE convoluté

Boccola pressare per PTFE corrugato

DN	Referencia Part n°	€
1/4"	**810410400**	-
5/16"	**810410500**	-
3/8"	**810410600**	-
1/2"	**810410800**	-
5/8"	**810411000**	-
3/4"	**810411201**	-
1"	**810411600**	-
1"1/4	**810412000**	-
1"1/2	**810412400**	-
2"	**810413200**	-
2"1/2	**810414000**	-

Racores industria alimentaria

Food industry fittings
Raccords alimentaires
Raccordi alimentari

Tuercas RJT - 304

NEW

RJT Nuts - 304

Écrous RJT - 304

Dadi RJT - 304

ROSCA THREAD	DN	Referencia Part n°	€
42.6X1/8	1"	**ZRJT H 25**	-
55.3X1/8	1" 1/2	**ZRJT H 38**	-
68.3X1/6	2"	**ZRJT H 51**	-
80.9X1/6	2" 1/2	**ZRJT H 63**	-
93.6X1/6	3"	**ZRJT H 76**	-
119.1X1/6	4"	**ZRJT H 102**	-
169.6X1/6	6"	**ZRJT H 152**	-

Welded Liner RJT

NEW

Welded Liner RJT

Revêtement soudé RJT

Rivestimento saldato RJT

DN	Referencia Part n°	€
1"	**ZRJT WL 25**	-
1"1/2	**ZRJT WL 38**	-
2"	**ZRJT WL 51**	-
2"1/2	**ZRJT WL 63**	-
3"	**ZRJT WL 76**	-
4"	**ZRJT WL 102**	-
6"	**ZRJT WL 152**	-

Macho RJT

NEW

RJT Male

RJT Mâle

RJT maschio

ROSCA THREAD	DN	Referencia Part n°	€
45.72x8	1"	**ZRJT M 25**	-
58.42x8	1"1/2	**ZRJT M 38**	-
72.72x6	2"	**ZRJT M 51**	-
85.42x6	2"1/2	**ZRJT M 63**	-
98.12x6	3"	**ZRJT M 76**	-
123.52x6	4"	**ZRJT M 102**	-
174.32x6	6"	**ZRJT M 152**	-

Junta NBR RJT

NEW

NBR RJT Gasket

Joint NBR RJT

Guarnizione NBR RJT

DN	Referencia Part n°	€
1"	**JRJT NBR 25**	-
1"1/2	**JRJT NBR 38**	-
2"	**JRJT NBR 51**	-
2"1/2	**JRJT NBR 63**	-
3"	**JRJT NBR 76**	-
4"	**JRJT NBR 102**	-
6"	**JRJT NBR 152**	-

RING JOINT TYPE (RJT)

RENDIMIENTO EXCEPCIONAL
EXCEPTIONAL PERFORMANCE

UK'S MOST POPULAR

Industrias Lácteas, Cerveceras, Alimentaria e Industria GeneraL
Dairy, Brewery, Food Processing & General Engineering Industries

+ RJT ESPIGA MANGUERA (consultar)
+ RJT HOSE TAIL (on request)

*Consultar / On request / Sur demande / Su richiesta

Serie Camlock DIN 2828

DIN 2828 Camlock Fittings
Raccords Camlock DIN 2828
Camlock DIN 2828

Camlock macho - rosca hembra BSP Tipo A

Male Camlock coupling, female BSP threaded Type A

Adapteur mâle Camlock- filetage femelle BSP Type A

Camlock maschio - filetto femmina BSP - TIPO A

DN	ROSCA THREAD	Referencia Part n°	€
12	1/2"	**ZA012**	-
20	1/2"	**ZA015**	-
20	3/4"	**ZA020**	-
25	1"	**ZA025**	-
32	1"1/4	**ZA032**	-
40	1"1/2	**ZA040**	-
50	2"	**ZA050**	-
65	2"1/2	**ZA065**	-
80	3"	**ZA080**	-
100	4"	**ZA100**	-

Camlock hembra - rosca hembra BSP Tipo D

Female Camlock coupling, female BSP threaded Tipe D

Adapteur Camlock femelle BSP Type D

Camlock femmina - filetto femmina BSP - TIPO D

DN	ROSCA THREAD	Referencia Part n°	€
12	1/2"	**ZD012**	-
20	1/2"	**ZD015**	-
20	3/4"	**ZD020**	-
25	1"	**ZD025**	-
32	1"1/4	**ZD032**	-
40	1"1/2	**ZD040**	-
50	2"	**ZD050**	-
65	2"1/2	**ZD065**	-
80	3"	**ZD080**	-
100	4"	**ZD100**	-

Camlock hembra - rosca macho BSPT Tipo B

Female Camlock coupling, female BSPT threaded Type B

Adapteur Camlock femelle - filetage mâle BSPT Type B

Camlock femmina - filetto maschio conico BSPT - TIPO B

DN	ROSCA THREAD	Referencia Part n°	€
12	1/2"	**ZB012**	-
20	1/2"	**ZB015**	-
20	3/4"	**ZB020**	-
25	1"	**ZB025**	-
32	1"1/4	**ZB032**	-
40	1"1/2	**ZB040**	-
50	2"	**ZB050**	-
65	2"1/2	**ZB065**	-
80	3"	**ZB080**	-
100	4"	**ZB100**	-

Camlock macho - para manguera Tipo E

Male Camlock coupling, with serrated hose shank Type E

Coupleur Camlock mâle Type E

Camlock maschio con inserto per tubo - TIPO E

DN		Referencia Part n°	€
12	1/2"	**ZE012**	-
20	1/2"	**ZE015**	-
20	3/4"	**ZE020**	-
25	1"	**ZE025**	-
32	1"1/4	**ZE032**	-
40	1"1/2	**ZE040**	-
50	2"	**ZE050**	-
65	2"1/2	**ZE065**	-
80	3"	**ZE080**	-
100	4"	**ZE100**	-

Camlock hembra - para manguera Tipo C

Female Camlock coupling with serrated hose shank Type C

Coupleur Camlock femelle - pour tuyau Type C

Camlock femmina con inserto per tubo - TIPO C

DN		Referencia Part n°	€
12	1/2"	**ZC012**	-
20	1/2"	**ZC015**	-
20	3/4"	**ZC020**	-
25	1"	**ZC025**	-
32	1"1/4	**ZC032**	-
40	1"1/2	**ZC040**	-
50	2"	**ZC050**	-
65	2"1/2	**ZC065**	-
80	3"	**ZC080**	-
100	4"	**ZC100**	-

Camlock macho - rosca macho BSPT Tipo F

Male Camlock coupling, male BSPT threaded Type F

Adapteur Camlock mâle BSPT Type F

Camlock maschio - filetto maschio conico BSPT - TIPO F

DN	ROSCA THREAD	Referencia Part n°	€
12	1/2"	**ZF012**	-
20	1/2"	**ZF015**	-
20	3/4"	**ZF020**	-
25	1"	**ZF025**	-
32	1"1/4	**ZF032**	-
40	1"1/2	**ZF040**	-
50	2"	**ZF050**	-
65	2"1/2	**ZF065**	-
80	3"	**ZF080**	-
100	4"	**ZF100**	-

Serie Camlock DIN 2828

DIN 2828 Camlock Fittings
Raccords Camlock DIN 2828
Camlock DIN 2828

Camlock hembra - tapón Tipo DC

Female Camlock Coupling-Dust caps Type DC

Bouchon Camlock femelle Type DC

Tappo femmina per maschio Camlock - TIPO DC

DN	Referencia Part n°	€
12	ZDC012	-
20	ZDC020	-
25	ZDC025	-
32	ZDC032	-
40	ZDC040	-
50	ZDC050	-
65	ZDC065	-
80	ZDC080	-
100	ZDC100	-

Camlock macho - tapón tipo DP

Male Camlock coupling-Dust plugs Type DP

Bouchon Camlock mâle Type DP

Tappo maschio per femmina Camlock - TIPO DP

DN	Referencia Part n°	€
12	ZDP012	-
20	ZDP020	-
25	ZDP025	-
32	ZDP032	-
40	ZDP040	-
50	ZDP050	-
65	ZDP065	-
80	ZDP080	-
100	ZDP100	-

Junta Camlock NBR

Camlock NBR Seal

Joint Camlock NBR

Guarnizione in NBR per Camlock

DN	Referencia Part n°	€
12	JCAMNBR012	-
20	JCAMNBR020	-
25	JCAMNBR025	-
32	JCAMNBR032	-
40	JCAMNBR040	-
50	JCAMNBR050	-
65	JCAMNBR065	-
80	JCAMNBR080	-
100	JCAMNBR100	-

Camlock macho - soldable BW

Camlock male - weldable BW

Adapteur Camlock mâle à souder BW

Camlock maschio a saldare - TIPO BW

TUBO PIPE	Referencia Part n°	€
21.3	ZABW012	-
26.9	ZABW020	-
33.7	ZABW025	-
42.4	ZABW032	-
48.3	ZABW040	-
60.3	ZABW050	-

Camlock hembra - soldable BW

Camlock female - weldable BW

Adapteur Camlock femelle à souder BW

Camlock femmina a saldare - TIPO BW

TUBO PIPE	Referencia Part n°	€
21.3	ZDBW012	-
26.9	ZDBW020	-
33.7	ZDBW025	-
42.4	ZDBW032	-
48.3	ZDBW040	-
60.3	ZDBW050	-

Junta Camlock silicona

Camlock silicone seal

Joint Camlock silicône

Guarnizione in silicone per Camlock

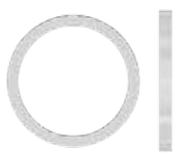

DN	Referencia Part n°	€
12	JCAMS012	-
20	JCAMS020	-
25	JCAMS025	-
32	JCAMS032	-
40	JCAMS040	-
50	JCAMS050	-
65	JCAMS065	-
80	JCAMS080	-
100	JCAMS100	-

Serie Camlock DIN 2828

DIN 2828 Camlock Fittings
Raccords Camlock DIN 2828
Camlock DIN 2828

Camlock macho - rosca hembra NPT Tipo A

Male Camlock coupling, female NPT threaded Type A

Adapteur Camlock mâle - filetage femelle NPT Type A

Camlock maschio - filetto femmina NPT - TIPO A

DN	ROSCA THREAD	Referencia Part n°	€
12	1/2"	**ZA012NPT**	-
20	3/4"	**ZA020NPT**	-
25	1"	**ZA025NPT**	-
32	1" 1/4	**ZA032NPT**	-
40	1" 1/2	**ZA040NPT**	-
50	2"	**ZA050NPT**	-
65	2" 1/2	**ZA065NPT**	-
80	3"	**ZA080NPT**	-
100	4"	**ZA100NPT**	-

Camlock hembra - rosca hembra NPT Tipo D

Female Camlock Coupling, female NPT threaded Type D

Adapteur Camlock femelle NPT Type D

Camlock femmina - filetto femmina NPT - TIPO D

DN	ROSCA THREAD	Referencia Part n°	€
12	1/2"	**ZD012NPT**	-
20	3/4"	**ZD020NPT**	-
25	1"	**ZD025NPT**	-
32	1" 1/4	**ZD032NPT**	-
40	1" 1/2	**ZD040NPT**	-
50	2"	**ZD050NPT**	-
65	2" 1/2	**ZD065NPT**	-
80	3"	**ZD080NPT**	-
100	4"	**ZD100NPT**	-

Camlock hembra - rosca macho NPT Tipo B

Female CamlockCoupling, male NPT threaded Type B

Adapteur Camlock femelle - filetage mâle NPT Type B

Camlock femmina - filetto maschio conico NPT - TIPO B

DN	ROSCA THREAD	Referencia Part n°	€
12	1/2"	**ZB012NPT**	-
20	3/4"	**ZB020NPT**	-
25	1"	**ZB025NPT**	-
32	1" 1/4	**ZB032NPT**	-
40	1" 1/2	**ZB040NPT**	-
50	2"	**ZB050NPT**	-
65	2" 1/2	**ZB065NPT**	-
80	3"	**ZB080NPT**	-
100	4"	**ZB100NPT**	-

Camlock macho - rosca macho NPT Tipo F

Male Camlock coupling, male NPT threaded Type F

Adapteur Camlock mâle NPT Type F

Camlock maschio - filetto maschio conico NPT - TIPO F

DN	ROSCA THREAD	Referencia Part n°	€
12	1/2"	**ZF012NPT**	-
20	3/4"	**ZF020NPT**	-
25	1"	**ZF025NPT**	-
32	1" 1/4	**ZF032NPT**	-
40	1" 1/2	**ZF040NPT**	-
50	2"	**ZF050NPT**	-
65	2" 1/2	**ZF065NPT**	-
80	3"	**ZF080NPT**	-
100	4"	**ZF100NPT**	-

CAMLOCK NPT

EN 14420-7 | DIN 2828
Ver ficha técnica | Check technical sheet

Para una amplia gama de aplicaciones como agua petróleo y productos químicos

For a wide range of applications such as water, petroleum and chemical liquids

Serie Camlock DIN 2828

DIN 2828 Camlock Fittings
Raccords Camlock DIN 2828
Camlock DIN 2828

Autolock hembra - rosca macho BSP Tipo B

Autolock, female, BSP male threaded Type B

Autolock femelle - filetage mâle BSP Type B

Autolock femmina - filetto maschio conico BSPT - TIPO B

DN	ROSCA THREAD	Referencia Part n°	€
12	1/2"	**ZB012S**	-
20	3/4"	**ZB020S**	-
25	1"	**ZB025S**	-
32	1"1/4	**ZB032S**	-
40	1"1/2	**ZB040S**	-
50	2"	**ZB050S**	-
65	2"1/2	**ZB065S**	-
80	3"	**ZB080S**	-
100	4"	**ZB100S**	-

Autolock hembra - rosca hembra BSP Tipo D

Autolock, female, BSP female threaded Type D

Autolock femelle - filetage femelle BSP Type D

Autolock femmina - filetto femmina BSP - TIPO D

DN	ROSCA THREAD	Referencia Part n°	€
12	1/2"	**ZD012S**	-
20	3/4"	**ZD020S**	-
25	1"	**ZD025S**	-
32	1"1/4	**ZD032S**	-
40	1"1/2	**ZD040S**	-
50	2"	**ZD050S**	-
65	2"1/2	**ZD065S**	-
80	3"	**ZD080S**	-
100	4"	**ZD100S**	-

Autolock hembra - para manguera Tipo C

Autolock, female, with serrated hose shank Type C

Autolock femelle - pour tuyau Type C

Autolock femmina con inserto per tubo - TIPO C

DN	ROSCA THREAD	Referencia Part n°	€
12	1/2"	**ZC012S**	-
20	3/4"	**ZC020S**	-
25	1"	**ZC025S**	-
32	1"1/4	**ZC032S**	-
40	1"1/2	**ZC040S**	-
50	2"	**ZC050S**	-
65	2"1/2	**ZC065S**	-
80	3"	**ZC080S**	-
100	4"	**ZC100S**	-

Autolock hembra - tapón Tipo DC

Autolock, female, DC type dust cap

Autolock femelle - bouchon Type DC

Tappo femmina per Autolock maschio - TIPO DC

DN	Referencia Part n°	€
12	**ZDC012S**	-
20	**ZDC020S**	-
25	**ZDC025S**	-
32	**ZDC032S**	-
40	**ZDC040S**	-
50	**ZDC050S**	-
65	**ZDC065S**	-
80	**ZDC080S**	-
100	**ZDC100S**	-

AUTOLOCK

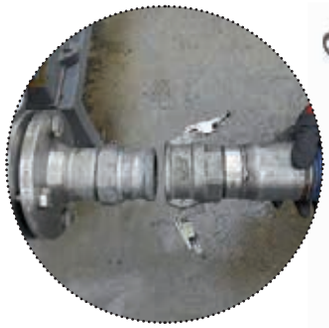

Camlock con cierre de seguridad, múltiples aplicaciones como agua, petróleo y productos químicos

Camlock with security lock, for multiple applications such us water, petroleum and chemical liquids

Ver ficha técnica | Check technical sheet

Acoples GUILLEMIN NF E-29572

GUILLEMIN NF E-29572 Fittings
Raccords GUILLEMIN NF E-29572
Raccordi GUILLEMIN NF E-29572

GUILLEMIN con cierre-rosca hembra BSP

GUILLEMIN S.S. with closure-BSP Female thread

GUILLEMIN Inox avec fermeture-Filetage Femelle BSP

GUILLEMIN Inox con chiusura-Filetto femmina BSP

DN	ROSCA THREAD	Referencia Part n°	€
20	3/4"	ZGU01C020	-
25	1"	ZGU01C025	-
32	1" 1/4	ZGU01C032	-
40	1" 1/2	ZGU01C040	-
50	2"	ZGU01C050	-
65	2" 1/2	ZGU01C065	-
80	3"	ZGU01C080	-
100	4"	ZGU01C100	-

GUILLEMIN sin cierre-rosca hembra BSP

GUILLEMIN S.S. without closure-BSP Female thread

GUILLEMIN Inox sans fermeture-Filetage Femelle BSP

GUILLEMIN Inox senza chiusura- Filetto femmina BSP

DN	ROSCA THREAD	Referencia Part n°	€
20	3/4"	ZGU01S020	-
25	1"	ZGU01S025	-
32	1" 1/4	ZGU01S032	-
40	1" 1/2	ZGU01S040	-
50	2"	ZGU01S050	-
65	2" 1/2	ZGU01S065	-
80	3"	ZGU01S080	-
100	4"	ZGU01S100	-

GUILLEMIN con cierre-rosca macho BSP

GUILLEMIN S.S. with closure-BSP Male thread

GUILLEMIN Inox avec fermeture-Filetage Mâle BSP

GUILLEMIN Inox con chiusura-Filetto maschio BSP

DN	ROSCA THREAD	Referencia Part n°	€
20	3/4"	ZGU02C020	-
25	1"	ZGU02C025	-
32	1" 1/4	ZGU02C032	-
40	1" 1/2	ZGU02C040	-
50	2"	ZGU02C050	-
65	2" 1/2	ZGU02C065	-
80	3"	ZGU02C080	-
100	4"	ZGU02C100	-

GUILLEMIN sin cierre-rosca macho BSP

GUILLEMIN S.S. without closure-BSP Male thread

GUILLEMIN Inox sans fermeture-Filetage Mâle BSP

GUILLEMIN Inox senza chiusura-Filetto maschio BSP

DN	ROSCA THREAD	Referencia Part n°	€
20	3/4"	ZGU02S020	-
25	1"	ZGU02S025	-
32	1" 1/4	ZGU02S032	-
40	1" 1/2	ZGU02S040	-
50	2"	ZGU02S050	-
65	2" 1/2	ZGU02S065	-
80	3"	ZGU02S080	-
100	4"	ZGU02S100	-

GUILLEMIN con cierre-tapón

GUILLEMIN S.S. with closure-Plug

GUILLEMIN Inox avec fermeture-Bouchon

GUILLEMIN Inox con chiusura-Tappo

DN	Referencia Part n°	€
20	ZGU04C020	-
25	ZGU04C025	-
32	ZGU04C032	-
40	ZGU04C040	-
50	ZGU04C050	-
65	ZGU04C065	-
80	ZGU04C080	-
100	ZGU04C100	-

GUILLEMIN con cierre-reductor

GUILLEMIN S.S. with closure-Reducer

GUILLEMIN Inox avec fermeture-Réduction

GUILLEMIN Inox con chiusura-Riduzione

DN		Referencia Part n°	€
40-32		ZGU03C040032	-
50-32	NEW	ZGU03C050032	-
50-40		ZGU03C050040	-
65-50		ZGU03C065050	-
80-65		ZGU03C080065	-
100-80		ZGU03C100080	-

Acoples GUILLEMIN NF E-29572

GUILLEMIN NF E-29572 Fittings
Raccords GUILLEMIN NF E-29572
Raccordi GUILLEMIN NF E-29572

GUILLEMIN con cierre-para manguera

GUILLEMIN S.S. with closure-For hose

GUILLEMIN Inox avec fermeture-Pour tuyau

GUILLEMIN Inox con chiusura- Per tubo

DN	L (mm)	TAMAÑO SIZE	Referencia Part n°	€
40	37	40	**ZGU05C040040**	-
45	37	40	**ZGU05C040045**	-
50	48	50	**ZGU05C050050**	-
50	45,5	50	**ZGU05C050055**	-
65	50	65	**ZGU05C065065**	-
80	70	80	**ZGU05C080080**	-

GUILLEMIN con cierre-soldable

GUILLEMIN S.S. with closure-Welding

GUILLEMIN Inox avec fermeture-À souder

GUILLEMIN Inox con chiusura-Saldabile

DN	Referencia Part n°	€
40	**ZGU06C040040**	-
50	**ZGU06C050050**	-
65	**ZGU06C065065**	-
80	**ZGU06C080080**	-

GUILLEMIN

EN 14420-8 | NF E-29572
Ver ficha técnica | Check technical sheet

Aplicaciones de presión y aspiración en un amplio rango de industrias
Pressure and suction purposes in a wide range of industries

Acoples TW (Tankwagen) DIN 28450

TW (Tankwagen) DIN 28450 Fittings
Raccords TW (Tankwagen) DIN 28450
Raccordi TW (Tankwagen) DIN 28450

TW rosca hembra BSP - acople hembra

TW BSP Female thread - female coupling

TW Filetage Femelle BSP - accouplement Femelle

TW Filetto femmina BSP - accoppiamento femmina

DN	Referencia Part n°	€
2"	**ZMK05032**	-
3"	**ZMK08048**	-
4"	**ZMK10064**	-

TW rosca hembra BSP - acople macho

TW BSP Female thread - male coupling

TW Filetage Femelle BSP - accouplement Mâle

TW Filetto femmina BSP - accoppiamento maschio

DN	Ø	Referencia Part n°	€
2"	70.5	**ZVK05032**	-
3"	102	**ZVK08048**	-
4"	128	**ZVK10064**	-

TW tapón - acople hembra

TW cap coupling

TW Bouchon - accouplement Femelle

TW Tappo - accoppiamento femmina

DN	Referencia Part n°	€
2"	**ZMB050**	-
3"	**ZMB080**	-
4"	**ZMB100**	-

TW tapón - acople macho

TW Plug - male coupling

TW Bouchon - accouplement Mâle

TW Tappo - accoppiamento maschio

DN	Ø	Referencia Part n°	€
2"	70.5	**ZVB050**	-
3"	102	**ZVB080**	-
4"	128	**ZVB100**	-

TW acople hembra

TW Female coupling

TW Accouplement Femelle

TW Accoppiamento femmina

DN	Referencia Part n°	€
2"	**ZMKS050050**	-
3"	**ZMKS080080**	-

TW acople macho

TW Male coupling

TW Accouplement Mâle

TW Accoppiamento maschio

DN	Referencia Part n°	€
2"	**ZVKS050050**	-
3"	**ZVKS080080**	-

Accesorios inox para racor industrial

Stainless Steel accessories for industrial fitting
Accessoires acier inox pour raccord industriel
Accessori in acciaio inossidabile per raccordo industriale

Campana inox 304 para racor industrial - cierre 45°

Stainless Steel 304 Crimping Ferrule 45° closure

Jupe pour raccord industriel acier inox 304 -fermeture 45°

Boccola in AISI 304 per raccordo industriale - chiusura 45°

DN	Ø INT. Ø INNER	Referencia Part n°	€
25	42.5	**ZCA025**	-
32	47	**ZCA032**	-
40	55	**ZCA040**	-
50	64	**ZCA050**	-
65	79	**ZCA065**	-
80	98	**ZCA080**	-
100	120	**ZCA100**	-

Abrazadera EN 14420-3 inox para racor industrial

Stainless Steel clamp for industrial fitting EN14420-3

Collier pour raccord industriel acier inox EN 14420-3

Collare Inox EN 14420-3 per raccordo industriale

Ø MANGUERA Ø HOSE	Ø INT. Ø INNER	Referencia Part n°	€
12	21-25	**ZAB01021025**	-
19	29-33	**ZAB01029033**	-
25	36-39	**ZAB01035039**	-
32	42-46	**ZAB01042046**	-
38	47-51	**ZAB01047051**	-
38	49-53	**ZAB01049053**	-
38	52-56	**ZAB01052056**	-
38	58-62	**ZAB01058062**	-
50	60-64	**ZAB01060064**	-
50	63-67	**ZAB01063067**	-
50	68-72	**ZAB01068072**	-
63	74-77	**ZAB01074077**	-
63	77-81	**ZAB01077081**	-
75	87-90	**ZAB01087090**	-
75	89-94	**ZAB01089094**	-
80	94-98	**ZAB01094098**	-
100	114-119	**ZAB01114119**	-

Abrazadera alta presión W4 inox

Stainless steel high pressure clamp W4

Collier haute pression W4 acier inox.

Collare Inox W4 alta pressione

Ø INT. Ø INNER	Referencia Part n°	€
17-19	**ZAB02017019**	-
20-22	**ZAB02020022**	-
23-25	**ZAB02023025**	-
26-28	**ZAB02026028**	-
29-31	**ZAB02029031**	-
32-35	**ZAB02032035**	-
36-39	**ZAB02036039**	-
40-43	**ZAB02040043**	-
44-47	**ZAB02044047**	-
48-51	**ZAB02048051**	-
52-55	**ZAB02052055**	-
56-59	**ZAB02056059**	-
60-63	**ZAB02060063**	-
64-67	**ZAB02064067**	-
68-73	**ZAB02068073**	-
74-79	**ZAB02074079**	-
80-85	**ZAB02080085**	-
86-91	**ZAB02086091**	-
92-97	**ZAB02092097**	-
98-103	**ZAB02098103**	-
104-112	**ZAB02104112**	-
113-121	**ZAB02113121**	-
122-130	**ZAB02122130**	-
131-139	**ZAB02131139**	-
140-148	**ZAB02140148**	-
149-161	**ZAB02149161**	-
162-174	**ZAB02162174**	-
175-187	**ZAB02175187**	-
188-200	**ZAB02188200**	-

Racores baja presión 150 LBS

Screw low pressure fittings 150 LBS
Raccords basse pression 150 LBS
Raccordi bassa pressione 150 LBS

Macho fijo espiga FIG.399

Nipple fixed male fig.399

Mâle fixe nipple fig. 399 inox

FIG. 399 - Maschio portagomma

ROSCA THREAD	DN	Referencia Part n°	€
1/4"	10	ZFIG39904	-
3/8"	12	ZFIG39906	-
1/2"	15	ZFIG39908	-
3/4"	20	ZFIG39912	-
1"	25	ZFIG39916	-
1" 1/4	32	ZFIG39920	-
1" 1/2	40	ZFIG39924	-
2"	52	ZFIG39932	-

Unión macho-macho FIG.150

Union male-male fig.150

Union mâle-mâle fig.150 inox

FIG. 150 - Barilotto maschio - maschio

ROSCA THREAD	Referencia Part n°	€
1/4"	ZFIG15004	-
3/8"	ZFIG15006	-
1/2"	ZFIG15008	-
3/4"	ZFIG15012	-
1"	ZFIG15016	-
1" 1/4	ZFIG15020	-
1" 1/2	ZFIG15024	-
2"	ZFIG15032	-

Tapón macho hexagonal FIG.290

Hexagon male plug FIG.290

Bouchon mâle 150 LBS tête hexagonale FIG.290

FIG. 290 - Tappo maschio testa esagonale

ROSCA THREAD	Referencia Part n°	€
1/8"	ZFIG29002	-
1/4"	ZFIG29004	-
3/8"	ZFIG29006	-
1/2"	ZFIG29008	-
3/4"	ZFIG29012	-
1"	ZFIG29016	-
1"1/4	ZFIG29020	-
1"1/2	ZFIG29024	-
2"	ZFIG29032	-
2"1/2	ZFIG29040	-
3"	ZFIG29048	-
4"	ZFIG29060	-

Adaptador hexagonal FIG.280

Hexagon nipple FIG.280

Mamelon hexagonal 150 LBS FIG.280

FIG. 280 - Nipples maschio - maschio

ROSCA THREAD	Referencia Part n°	€
1/4"	ZFIG28004	-
3/8"	ZFIG28006	-
1/2"	ZFIG28008	-
3/4"	ZFIG28012	-
1"	ZFIG28016	-
1"1/4	ZFIG28020	-
1"1/2	ZFIG28024	-
2"	ZFIG28032	-
2"1/2	ZFIG28040	-
3"	ZFIG28048	-
4"	ZFIG28060	-

Reducción macho-macho FIG.245

Reducer male-male fig. 245

Réduction mâle-mâle fig. 245 inox

FIG. 245 - Nipples di riduzione maschio - maschio

ROSCA THREAD		Referencia Part n°	€
1/4"	1/8"	ZFIG2450402	-
3/8"	1/4"	ZFIG2450604	-
1/2"	1/4"	ZFIG2450804	-
1/2"	3/8"	ZFIG2450806	-
3/4"	3/8"	ZFIG2451206	-
3/4"	1/2"	ZFIG2451208	-
1"	1/2"	ZFIG2451608	-
1"	3/4"	ZFIG2451612	-
1" 1/4	3/4"	ZFIG2452012	-
1" 1/4	1"	ZFIG2452016	-
1" 1/2	1"	ZFIG2452416	-
1"1/2	1" 1/4	ZFIG2452420	-
2"	1" 1/4	ZFIG2453220	-
2"	1" 1/2	ZFIG2453224	-
2" 1/2	2"	ZFIG2454032	-
3"	2" 1/2	ZFIG2454840	-

Tuerca plana FIG.312

Flat nut fig.312

Écrou plat fig.312 inox

FIG. 312 - Dado piano

ROSCA THREAD	Referencia Part n°	€
1/4"	ZFIG31204	-
3/8"	ZFIG31206	-
1/2"	ZFIG31208	-
3/4"	ZFIG31212	-
1"	ZFIG31216	-
1" 1/4	ZFIG31220	-
1" 1/2	ZFIG31224	-
2"	ZFIG31232	-

Racores baja presión 150 LBS

Screw low pressure fittings 150 LBS
Raccords basse pression 150 LBS
Raccordi bassa pressione 150 LBS

Tapón hembra hexagonal FIG.300

Hexagon female cap. FIG.300

Bouchon femelle hexagonal 150 LBS FIG.300

FIG. 300 - Tappo esagonale femmina fissa

ROSCA THREAD	Referencia Part n°	€
1/8"	ZFIG30002	-
1/4"	ZFIG30004	-
3/8"	ZFIG30006	-
1/2"	ZFIG30008	-
3/4"	ZFIG30012	-
1"	ZFIG30016	-
1"1/4	ZFIG30020	-
1"1/2	ZFIG30024	-
2"	ZFIG30032	-
2"1/2	ZFIG30040	-
3"	ZFIG30048	-
4"	ZFIG30060	-

Tapón hembra redondo FIG.301

Round female cap. FIG.301

Bouchon femelle ronde 150 LBS FIG.301

FIG. 301 - Tappo rotondo femmina fissa

ROSCA THREAD	Referencia Part n°	€
1/8"	ZFIG30102	-
1/4"	ZFIG30104	-
3/8"	ZFIG30106	-
3/4"	ZFIG30112	-
1"	ZFIG30116	-
1"1/4	ZFIG30120	-
1"1/2	ZFIG30124	-
2"	ZFIG30132	-
2"1/2	ZFIG30140	-
3"	ZFIG30148	-
4"	ZFIG30160	-

Hasta fin de existencias / *Until end of stock* / Jusqu´à la fin du stock / *Fino ad esaurimento*

Adaptador hembra BSP DIN 2986 FIG.270

BSP Female coupling DIN 2986 FIG.270

Manchon femelle gaz DIN 2986 150 LBS FIG.270

FIG. 270 - Manicotto femmina-femmina DIN 2986

ROSCA THREAD	Referencia Part n°	€
1/4"	ZFIG27004	-
3/8"	ZFIG27006	-
1/2"	ZFIG27008	-
3/4"	ZFIG27012	-
1"	ZFIG27016	-
1"1/4	ZFIG27020	-
1"1/2	ZFIG27024	-
2"	ZFIG27032	-
2"1/2	ZFIG27040	-
3"	ZFIG27048	-
4"	ZFIG27060	-

Reductor macho-hembra FIG.241

Male-female reducer FIG.241

Réduction 150 LBS MG - FG FIG.241

FIG. 241 - Riduzione maschio - femmina fissa

ROSCA THREAD	R2		Referencia Part n°	€
1/8"	1/4"		ZFIG2410204	-
1/4"	3/8"		ZFIG2410406	-
1/4"	1/2"		ZFIG2410408	-
3/8"	1/2"		ZFIG2410608	-
1/2"	3/4"		ZFIG2410812	-
3/4"	1"		ZFIG2411216	-
3/4"	1"1/4	NEW	ZFIG2411220	-
1"	1"1/4		ZFIG2411620	-
1"	1" 1/2		ZFIG2411624	-
1"1/4	1"1/2		ZFIG2412024	-
1"1/2	2"		ZFIG2412432	-
2"	2"1/2		ZFIG2413240	-
2"1/2	3"		ZFIG2414048	-
3"	4"		ZFIG2414860	-

Tapón macho cuadrado FIG.291

Male square plug FIG.291

Bouchon mâle 150 LBS tête carrée FIG.291

FIG. 291 - Tappo maschio con testa quadrata

ROSCA THREAD	Referencia Part n°	€
1/8"	ZFIG29102	-
1/4"	ZFIG29104	-
3/8"	ZFIG29106	-
1/2"	ZFIG29108	-
3/4"	ZFIG29112	-
1"	ZFIG29116	-
1"1/4	ZFIG29120	-
1"1/2	ZFIG29124	-
2"	ZFIG29132	-
2"1/2	ZFIG29140	-
3"	ZFIG29148	-
4"	ZFIG29160	-

Tubo roscado FIG.531

Threaded pipe fig. 531

Tube fileté fig. 531 inox

FIG. 531 - Tubo filettato

ROSCA THREAD	Referencia Part n°	€
1/4"	ZFIG53104	-
3/8"	ZFIG53106	-
1/2"	ZFIG53108	-
3/4"	ZFIG53112	-
1"	ZFIG53116	-
1" 1/4	ZFIG53120	-
1" 1/2	ZFIG53124	-
2"	ZFIG53132	-

Racores baja presión 150 LBS

Screw low pressure fittings 150 LBS
Raccords basse pression 150 LBS
Raccordi bassa pressione 150 LBS

Reducción hembra-hembra FIG.240

Female-female Reducer socket FIG.240

Réduction Femelle-femelle 150 LBS FIG.240

FIG. 240 - Riduzione femmina-femmina

ROSCA THREAD	R2	Referencia Part n°	€
1/4"	1/8"	ZFIG2400402	-
3/8"	1/4"	ZFIG2400604	-
1/2"	3/8"	ZFIG2400806	-
3/4"	1/2"	ZFIG2401208	-
1"	3/4"	ZFIG2401612	-
1"1/4	1"	ZFIG2402016	-
1"1/2	1"1/4	ZFIG2402420	-
2"	1"1/2	ZFIG2403224	-
2"1/2	2"	ZFIG2404032	-
3"	2"	ZFIG2404832	-
3"	2"1/2	ZFIG2404840	-
4"	2"	ZFIG2406032	-

Codo 90° macho-hembra FIG.092

Male-female elbow 90° FIG.092

Coude 90° 150 LBS MG - FG FIG.092

FIG. 092 - Adattatore 90° maschio - femmina

ROSCA THREAD	Referencia Part n°	€
1/8"	ZFIG09202	-
1/4"	ZFIG09204	-
3/8"	ZFIG09206	-
1/2"	ZFIG09208	-
3/4"	ZFIG09212	-
1"	ZFIG09216	-
1"1/4	ZFIG09220	-
1"1/2	ZFIG09224	-
2"	ZFIG09232	-
2"1/2	ZFIG09240	-
3"	ZFIG09248	-
4"	ZFIG09260	-

Codo 90° hembra-hembra FIG.090

Female-female elbow 90° FIG.090

Coude 90° 150 LBS femelle gaz FIG.090

FIG. 090 - Adattatore 90° femmina fissa

ROSCA THREAD	Referencia Part n°	€
1/8"	ZFIG09002	-
1/4"	ZFIG09004	-
3/8"	ZFIG09006	-
1/2"	ZFIG09008	-
3/4"	ZFIG09012	-
1"	ZFIG09016	-
1"1/4	ZFIG09020	-
1"1/2	ZFIG09024	-
2"	ZFIG09032	-
2"1/2	ZFIG09040	-
3"	ZFIG09048	-
4"	ZFIG09060	-

TE hembra-hembra-hembra FIG.130

Female-female TEE FIG.130

TÉS 150 LBS FG - FG - FG FIG.130

FIG. 130 - Adattatore a T femmina fissa

ROSCA THREAD	Referencia Part n°	€
1/8"	ZFIG13002	-
1/4"	ZFIG13004	-
3/8"	ZFIG13006	-
1/2"	ZFIG13008	-
3/4"	ZFIG13012	-
1"	ZFIG13016	-
1"1/4	ZFIG13020	-
1"1/2	ZFIG13024	-
2"	ZFIG13032	-
2"1/2	ZFIG13040	-
3"	ZFIG13048	-
4"	ZFIG13060	-

Codo 45° hembra-hembra FIG.120

Female-female elbow 45° FIG.120

Coude 45° 150 LBS FG - FG FIG.120

FIG. 120 - Adattatore 45° femmina fissa

ROSCA THREAD	Referencia Part n°	€
1/8"	ZFIG12002	-
1/4"	ZFIG12004	-
3/8"	ZFIG12006	-
1/2"	ZFIG12008	-
3/4"	ZFIG12012	-
1"	ZFIG12016	-
1"1/4	ZFIG12020	-
1"1/2	ZFIG12024	-
2"	ZFIG12032	-
2"1/2	ZFIG12040	-
3"	ZFIG12048	-
4"	ZFIG12060	-

Cruz roscada FIG.180

Threaded cross FIG.180

Croix égale 150 LBS FG FIG.180

FIG. 180 - Adattatore a croce femmina fissa

ROSCA THREAD	Referencia Part n°	€
1/8"	ZFIG18002	-
1/4"	ZFIG18004	-
3/8"	ZFIG18006	-
1/2"	ZFIG18008	-
3/4"	ZFIG18012	-
1"	ZFIG18016	-
1"1/4	ZFIG18020	-
1"1/2	ZFIG18024	-
2"	ZFIG18032	-
2"1/2	ZFIG18040	-
3"	ZFIG18048	-
4"	ZFIG18060	-

Racores baja presión 150 LBS

Screw low pressure fittings 150 LBS
Raccords basse pression 150 LBS
Raccordi bassa pressione 150 LBS

Unión 3 piezas hembra-hembra FIG.340

Female-female FIG.340

Union 3 pièces 150 LBS FG - FG FIG.340

FIG. 340 - Unione 3 pezzi femmina - femmina

ROSCA THREAD	Referencia Part n°	€
1/8"	ZFIG34002	-
1/4"	ZFIG34004	-
3/8"	ZFIG34006	-
1/2"	ZFIG34008	-
3/4"	ZFIG34012	-
1"	ZFIG34016	-
1"1/4	ZFIG34020	-
1"1/2	ZFIG34024	-
2"	ZFIG34032	-
2"1/2	ZFIG34040	-
3"	ZFIG34048	-
4"	ZFIG34060	-

Unión 3 piezas macho-hembra FIG.341

Male-female union FIG.341

Union 3 pièces 150 LBS MG - FG FIG.341

FIG. 341 - Unione 3 pezzi maschio - a saldare

ROSCA THREAD	Referencia Part n°	€
1/4"	ZFIG34104	-
3/8"	ZFIG34106	-
1/2"	ZFIG34108	-
3/4"	ZFIG34112	-
1"	ZFIG34116	-
1"1/4	ZFIG34120	-
1"1/2	ZFIG34124	-
2"	ZFIG34132	-
2"1/2	ZFIG34140	-
3"	ZFIG34148	-
4"	ZFIG34160	-

Macho soldar FIG.149

Welding male fig.149

Mâle à souder fig.149 inox

FIG. 149 - maschio a saldare

ROSCA THREAD	Referencia Part n°	€
1/4"	ZFIG14904	-
3/8"	ZFIG14906	-
1/2"	ZFIG14908	-
3/4"	ZFIG14912	-
1"	ZFIG14916	-
1" 1/4	ZFIG14920	-
1" 1/2	ZFIG14924	-
2"	ZFIG14932	-

Unión 3 piezas hembra-soldar FIG.340HS microfundido

Union 3 fem. welding pieces fig.340hs micro-casting

Union 3 pcs fem. à souder fig.340hs acier moulé

FIG. 340HS - Unione 3 pezzi femmina - a saldare (microfusione)

ROSCA THREAD	Referencia Part n°	€
1/4"	ZFIG34004HS	-
3/8"	ZFIG34006HS	-
1/2"	ZFIG34008HS	-
3/4"	ZFIG34012HS	-
1"	ZFIG34016HS	-
1" 1/4	ZFIG34020HS	-
1" 1/2	ZFIG34024HS	-
2"	ZFIG34032HS	-

Unión 3 piezas soldar FIG.340S microfundido

Union 3 welding pieces fig. 340s micro-casting

Union 3 pièces à souder fig. 340s acier moulé

FIG. 340S - Unione 3 pezzi a saldare (microfusione)

DN	Referencia Part n°	€
1/4"	ZFIG34004S	-
3/8"	ZFIG34006S	-
1/2"	ZFIG34008S	-
3/4"	ZFIG34012S	-
1"	ZFIG34016S	-
1" 1/4	ZFIG34020S	-
1" 1/2	ZFIG34024S	-
2"	ZFIG34032S	-

Unión 3 piezas macho-soldar FIG.341MS microfundido

Union 3 welding male pieces fig.341ms micro-casting

Union 3 pcs mâle à souder fig.341ms acier moulé

FIG. 341MS - Unione 3 pezzi maschio - a saldare (microfusione)

ROSCA THREAD	Referencia Part n°	€
1/4"	ZFIG34104MS	-
3/8"	ZFIG34106MS	-
1/2"	ZFIG34108MS	-
3/4"	ZFIG34112MS	-
1"	ZFIG34116MS	-
1" 1/4	ZFIG34120MS	-
1" 1/2	ZFIG34124MS	-
2"	ZFIG34132MS	-

Racores baja presión 150 LBS

Screw low pressure fittings 150 LBS
Raccords basse pression 150 LBS
Raccordi bassa pressione 150 LBS

Válvula esfera paso total baja presión 3 piezas

Ball-valve low pressure full bore 3 pcs

Robinet basse pression 2 voies boisseau sphérique passage total 3 pcs

Rubinetto a sfera bassa pressione 3 pcs

ROSCA THREAD	Referencia Part n°	€
1/4" BSP	**BP2V3P14INOX**	-
3/8" BSP	**BP2V3P38INOX**	-
1/2" BSP	**BP2V3P12INOX**	-
3/4" BSP	**BP2V3P34INOX**	-
1" BSP	**BP2V3P1INOX**	-
1" 1/4 BSP	**BP2V3P114INOX**	-
1" 1/2 BSP	**BP2V3P112INOX**	-
2" BSP	**BP2V3P2INOX**	-

Válvula esfera paso total baja presión 64 Bar

Ball-valve low pressure full bore 64 Bar

Robinet basse pression 2 voies boisseau sphérique passage total 64 Bar

Rubinetto a sfera bassa pressione passaggio totale 64 Bar

ROSCA THREAD	DN	Referencia Part n°	€
1/4" BSP	8	**BP2V14INOX**	-
3/8" BSP	10	**BP2V38INOX**	-
1/2" BSP	15	**BP2V12INOX**	-
3/4" BSP	20	**BP2V34INOX**	-
1" BSP	25	**BP2V1INOX**	-
1"1/4 BSP	32	**BP2V114INOX**	-
1"1/2 BSP	40	**BP2V112INOX**	-
2" BSP	50	**BP2V2INOX**	-
2"1/2 BSP	65	**BP2V212INOX**	-
3" BSP	80	**BP2V3INOX**	-

Enchufes rápidos AISI 316 239
Quick couplings AISI 316
Coupleurs rapides AISI 316
Innesti rapidi AISI 316

Llaves de paso AISI 316 242
Ball valves AISI 316
Robinets AISI 316
Rubinetti AISI 316

Racores giratorios AISI 316 245
Swivel fittings AISI 316
Raccords tournants AISI 316
Giunti girevole AISI 316

07

ACCESORIOS

Accessories

Accessoires

Accessori

Enchufes rápidos AISI 316

Quick couplings AISI 316
Coupleurs rapides AISI 316
Innesti rapidi AISI 316

Enchufes rápidos ▪ Quick couplings ▪ Quick release couplings ▪ Innesti rapidi | 239

Z8001/Z8002

Z8201/Z8202

Z8008/Z8009

Z8301/Z8302

Z9001/Z9002

Z7111/Z7112

Z9051/Z9052

Enchufes rápidos ▪ Quick couplings ▪ Coupleurs rapides ▪ Innesti rapidi | 241

ZB820

ZB800

ZB830

ZB801

ZB811

ZB900

Llaves de paso AISI 316

Ball valves AISI 316
Robinets AISI 316
Rubinetti AISI 316

Llaves de paso ▪ Ball valves ▪ Robinets ▪ Rubinetti | 242

MKH G | MKH_L | MKH_S | MKH G_DN | MKH_L_DN | MKH_S_DN | MK3A-G

Llave 2 vías ▪ 2 ways ball valve ▪ Robinet 2 voies ▪ Rubinetto a sfera | 244

ZGB2V | ZGB2V NPT | ZGB2V L | ZGB2V S

Llave 3 vías ▪ 3 ways ball valve ▪ Robinet 3 voies ▪ Rubinetto a sfera | 244

ZGB3VH

Manetas ▪ Handles ▪ Leviers ▪ Manopole | 244

Z60013

Racores giratorios AISI 316

Swivel fittings AISI 316
Raccords tournants AISI 316
Giunti girevole AISI 316

Z GGL

Z GG90

Enchufes rápidos AISI 316

Quick couplings AISI 316
Coupleurs rapides AISI 316
Innesti rapidi AISI 316

Enchufes de punzón ISO 7241-B

Quick coupling ISO 7241-B

Coupleurs rapides à clapet ISO 7241-B

Innesto rapido ISO-B (ISO 7241-B)

ROSCA THREAD	TAMAÑO ISO ISO SIZE	TAMAÑO BG BG SIZE	E. C.	Referencia Part n°	€
1/4" BSP	6,3	1	M	**Z800104**	-
3/8" BSP	10	2	M	**Z800106**	-
1/2" BSP	12,5	3	M	**Z800108**	-
3/4" BSP	20	4	M	**Z800112**	-
1" BSP	25	5	M	**Z800116**	-
1"1/4 BSP	40	7	M	**Z800120**	-
1"1/2 BSP	40	7	M	**Z800124**	-
2" BSP	50	8	M	**Z800132**	-
1/4" BSP	6,3	1	H	**Z800204**	-
3/8" BSP	10	2	H	**Z800206**	-
1/2" BSP	12,5	3	H	**Z800208**	-
3/4" BSP	20	4	H	**Z800212**	-
1" BSP	25	5	H	**Z800216**	-
1"1/4 BSP	40	7	H	**Z800220**	-
1"1/2 BSP	40	7	H	**Z800224**	-
2" BSP	50	8	H	**Z800232**	-

Enchufes de punzón 7241-A

Quick coupling 7241-A

Coupleurs rapides à clapet 7241-A

Innesto rapido ISO-A (ISO 7241-A)

ROSCA THREAD	TAMAÑO ISO ISO SIZE	TAMAÑO BG BG SIZE	E. C.	Referencia Part n°	€
3/8" BSP	10	2	M	**Z820106**	-
1/2" BSP	12,5	3	M	**Z820108**	-
3/4" BSP	20	4	M	**Z820112**	-
1" BSP	25	5	M	**Z820116**	-
1"1/4 BSP	31,5	6	M	**Z820120**	-
1"1/2 BSP	40	7	M	**Z820124**	-
2" BSP	50	8	M	**Z820132**	-
3/8" BSP	10	2	H	**Z820206**	-
1/2" BSP	12,5	3	H	**Z820208**	-
3/4" BSP	20	4	H	**Z820212**	-
1" BSP	25	5	H	**Z820216**	-
1"1/4 BSP	31,5	6	H	**Z820220**	-
1"1/2 BSP	40	7	H	**Z820224**	-
2" BSP	50	8	H	**Z820232**	-

Enchufes autoroscantes ISO 14541

Quick screw couplings ISO 14541

Coupleur rapide à visser filetage ISO 14541

Innesti rapidi a vite ISO 14541

ROSCA THREAD	TAMAÑO ISO ISO SIZE	TAMAÑO BG BG SIZE	E. C.	Referencia Part n°	€
1/4" BSP	6,3	1	M	**Z800804**	-
3/8" BSP	10	2	M	**Z800806**	-
1/2" BSP	12,5	3	M	**Z800808**	-
3/4" BSP	20	4	M	**Z800812**	-
1" BSP	25	5	M	**Z800816**	-
1"1/4 BSP	40	7	M	**Z800820**	-
1"1/2 BSP	40	7	M	**Z800824**	-
1/4" BSP	6,3	1	H	**Z800904**	-
3/8" BSP	10	2	H	**Z800906**	-
1/2" BSP	12,5	3	H	**Z800908**	-
3/4" BSP	20	4	H	**Z800912**	-
1" BSP	25	5	H	**Z800916**	-
1"1/4 BSP	40	7	H	**Z800920**	-
1"1/2 BSP	40	7	H	**Z800924**	-

Enchufes paso total 7241-B

Quick coupling free flow 7241-B

Coupleurs rapides passage total 7241-B

Innesto rapido ISO-B a passaggio libero

ROSCA THREAD	TAMAÑO ISO ISO SIZE	TAMAÑO BG BG SIZE	E. C.	Referencia Part n°	€
1/8" BSP	5	0	M	**Z830102**	-
1/4" BSP	6,3	1	M	**Z830104**	-
3/8" BSP	10	2	M	**Z830106**	-
1/2" BSP	12,5	3	M	**Z830108**	-
3/4" BSP	20	4	M	**Z830112**	-
1" BSP	25	5	M	**Z830116**	-
1"1/4 BSP	40	7	M	**Z830120**	-
1"1/2 BSP	40	7	M	**Z830124**	-
2" BSP	50	8	M	**Z830132**	-
1/8" BSP	5	0	H	**Z830202**	-
1/4" BSP	6,3	1	H	**Z830204**	-
3/8" BSP	10	2	H	**Z830206**	-
1/2" BSP	12,5	3	H	**Z830208**	-
3/4" BSP	20	4	H	**Z830212**	-
1" BSP	25	5	H	**Z830216**	-
1"1/4 BSP	40	7	H	**Z830220**	-
1"1/2 BSP	40	7	H	**Z830224**	-
2" BSP	50	8	H	**Z830232**	-

Enchufes rápidos AISI 316

Quick couplings AISI 316
Coupleurs rapides AISI 316
Innesti rapidi AISI 316

Enchufes de válvula plana ISO16028

Flat face quick coupling ISO16028

Coupleurs à clapet face plane ISO16028

Innesto rapido faccia piana ISO16028

ROSCA THREAD	TAMAÑO ISO ISO SIZE	TAMAÑO BG BG SIZE	E. C.	Referencia Part n°	€
1/4" BSP	6,3	1	M	**Z900104**	-
3/8" BSP	10	2	M	**Z900106**	-
1/2" BSP	12,5	3	M	**Z900108**	-
3/4" BSP	16	4A	M	**Z900112**	-
1" BSP	19	4	M	**Z900116**	-
1"1/4 BSP	25	5	M	**Z900120**	-
1"1/2 BSP	38	7	M	**Z900124**	-
2" BSP	51	8	M	**Z900132**	-
1/4" BSP	6,3	1	H	**Z900204**	-
3/8" BSP	10	2	H	**Z900206**	-
1/2" BSP	12,5	3	H	**Z900208**	-
3/4" BSP	16	4A	H	**Z900212**	-
1" BSP	19	4	H	**Z900216**	-
1"1/4 BSP	25	5	H	**Z900220**	-
1"1/2 BSP	38	7	H	**Z900224**	-
2" BSP	51	8	H	**Z900232**	-

Enchufes de bola 700 bar acoplamiento en presión

Quick coupling ball type 700 bar connection u/pressure

Coupleurs rapides à bille 700 bar connexion sous pression

Innesti rapido a sfera 700 bar, connesione in pressione

ROSCA THREAD	TAMAÑO ISO ISO SIZE	TAMAÑO BG BG SIZE	E. C.	Referencia Part n°	€
3/8" NPT	10	2	M	**Z711106**	-
3/8" NPT	10	2	H	**Z711206**	-

Válvula plana autoroscante acoplamiento en presión

Flat face screw couplings, connection u/pressure

Coupleurs face plane à visser, connexion sous pression

Innesto rapido a vite, faccia piana, innesto in pressione

ROSCA THREAD		TAMAÑO ISO ISO SIZE	TAMAÑO BG BG SIZE	Referencia Part n°	€
3/8" BSP	M30x2	10	2	**Z905106**	-
1/2" BSP	M36x2	12,5	3	**Z905108**	-
3/4" BSP	M36x2	16	4A	**Z905112**	-
1" BSP	M43x3	19	4	**Z905116**	-
1"1/4 BSP	M48x3	25	5	**Z905120**	-
1"1/2 BSP	M80x4	40	7	**Z905124**	-
3/8" BSP	M30X2	10	2	**Z905206**	-
1/2" BSP	M36X2	12,5	3	**Z905208**	-
3/4" BSP	M36X2	16	4A	**Z905212**	-
1" BSP	M43X3	19	4	**Z905216**	-
1"1/4 BSP	M48X3	25	5	**Z905220**	-
1"1/2 BSP	M80X4	40	7	**Z905224**	-

Enchufes rápidos AISI 316

Quick couplings AISI 316
Coupleurs rapides AISI 316
Innesti rapidi AISI 316

Enchufes 7241-A

Quick couplings 7241-A

Coupleurs 7241-A

Innesto rapido ISO-A (ISO 7241-A) -

ROSCA THREAD	TAMAÑO ISO ISO SIZE	TAMAÑO BG BG SIZE	E. C.	Referencia Part n°	€
1/4" BSP	6,3	1	M	**ZB820104**	-
3/8" BSP	10	2	M	**ZB820106**	-
1/2" BSP	12,5	3	M	**ZB820108**	-
3/4" BSP	20	4	M	**ZB820112**	-
1" BSP	25	5	M	**ZB820116**	-
1/4" BSP	6,3	1	H	**ZB820204**	-
3/8" BSP	10	2	H	**ZB820206**	-
1/2" BSP	12,5	3	H	**ZB820208**	-
3/4" BSP	20	4	H	**ZB820212**	-
1" BSP	25	5	H	**ZB820216**	-

Enchufes 7241-B

Quick couplings 7241-B

Coupleurs 7241-B

Innesto rapido ISO-B (ISO 7241-B) -

ROSCA THREAD	TAMAÑO ISO ISO SIZE	TAMAÑO BG BG SIZE	E. C.	Referencia Part n°	€
1/8" BSP	5	0	M	**ZB800102**	-
1/4" BSP	6,3	1	M	**ZB800104**	-
3/8" BSP	10	2	M	**ZB800106**	-
1/2" BSP	12,5	3	M	**ZB800108**	-
3/4" BSP	20	4	M	**ZB800112**	-
1" BSP	25	5	M	**ZB800116**	-
1/8" BSP	5	0	H	**ZB800202**	-
1/4" BSP	6,3	1	H	**ZB800204**	-
3/8" BSP	10	2	H	**ZB800206**	-
1/2" BSP	12,5	3	H	**ZB800208**	-
3/4" BSP	20	4	H	**ZB800212**	-
1" BSP	25	5	H	**ZB800216**	-

Enchufes Paso Total 7241-B

Quick couplings free flow 7241-B

Coupleurs passage total 7241-B

Innesto rapido ISO-B a passaggio libero -

ROSCA THREAD	TAMAÑO ISO ISO SIZE	TAMAÑO BG BG SIZE	E. C.	Referencia Part n°	€
1/4" BSP	6,3	1	M	**ZB830104**	-
3/8" BSP	10	2	M	**ZB830106**	-
1/2" BSP	12,5	3	M	**ZB830108**	-
3/4" BSP	20	4	M	**ZB830112**	-
1" BSP	25	5	M	**ZB830116**	-
1/4" BSP	6,3	1	H	**ZB830204**	-
3/8" BSP	10	2	H	**ZB830206**	-
1/2" BSP	12,5	3	H	**ZB830208**	-
3/4" BSP	20	4	H	**ZB830212**	-
1" BSP	25	5	H	**ZB830216**	-

Enchufes NPT 7241-A

Quick couplings 7241-A NPT

Coupleurs 7241-A NPT

Innesto rapido ISO-A (ISO 7241-A) NPT -

ROSCA THREAD	TAMAÑO ISO ISO SIZE	TAMAÑO BG BG SIZE	E. C.	Referencia Part n°	€
1/4" NPT	6,3	1	M	**ZB801104**	-
3/8" NPT	10	2	M	**ZB801106**	-
1/2" NPT	12,5	3	M	**ZB801108**	-
3/4" NPT	20	4	M	**ZB801112**	-
1" NPT	25	5	M	**ZB801116**	-
1/4" NPT	6,3	1	H	**ZB801204**	-
3/8" NPT	10	2	H	**ZB801206**	-
1/2" NPT	12,5	3	H	**ZB801208**	-
3/4" NPT	20	4	H	**ZB801212**	-
1" NPT	25	5	H	**ZB801216**	-

Enchufes NPT 7241-B

Quick couplings 7241-B NPT

Coupleurs 7241-B NPT

Innesto rapido ISO-B (ISO 7241-B) NPT -

ROSCA THREAD	TAMAÑO ISO ISO SIZE	TAMAÑO BG BG SIZE	E. C.	Referencia Part n°	€
1/4" NPT	6,3	1	M	**ZB811104**	-
3/8" NPT	10	2	M	**ZB811106**	-
1/2" NPT	12,5	3	M	**ZB811108**	-
3/4" NPT	20	4	M	**ZB811112**	-
1" NPT	25	5	M	**ZB811116**	-
1/4" NPT	6,3	1	H	**ZB811204**	-
3/8" NPT	10	2	H	**ZB811206**	-
1/2" NPT	12,5	3	H	**ZB811208**	-
3/4" NPT	20	4	H	**ZB811212**	-
1" NPT	25	5	H	**ZB811216**	-

Enchufes de válvula plana ISO16028

Flat face quick coupling ISO16028

Coupleurs à clapet face plane ISO16028

Innesto rapido faccia piana ISO16028 -

ROSCA THREAD	TAMAÑO ISO ISO SIZE	TAMAÑO BG BG SIZE	E. C.	Referencia Part n°	€
1/4" BSP	6	1	M	**ZB900104**	-
3/8" BSP	10	2	M	**ZB900106**	-
1/2" BSP	12	3	M	**ZB900108**	-
3/4" BSP	16	4A	M	**ZB900112**	-
1" BSP	19	4	M	**ZB900116**	-
1/4" BSP	6	1	H	**ZB900204**	-
3/8" BSP	10	2	H	**ZB900206**	-
1/2" BSP	12	3	H	**ZB900208**	-
3/4" BSP	16	4A	H	**ZB900212**	-
1" BSP	19	4	H	**ZB900216**	-

Llaves de paso AISI 316

Ball valves AISI 316
Robinets AISI 316
Rubinetti AISI 316

Llave 2 vías rosca hembra BSP

2 Way ball-valves BSP female ISO 228

Robinet haute pression 2 voies boisseau sphérique femelle BSP

Rubinetto a sfera femmina - femmina BSP

DN	ROSCA THREAD	Referencia Part n°	€
4	1/8" BSP	**MKH G 1/8**	-
6	1/4" BSP	**MKH G 1/4**	-
10	3/8" BSP	**MKH G 3/8**	-
13	1/2"BSP	**MKH G 1/2**	-
16	5/8" BSP	**MKH G 5/8***	-
20	3/4" BSP	**MKH G 3/4**	-
25	1" BSP	**MKH G 1**	-
25	1" 1/4 BSP	**MKH G 1 1/4 DN25**	-
25	1"1/2 BSP	**MKH G 1 1/2 DN25**	-

***Hasta fin de existencias** / *Until end of stock* / Jusqu´à la fin du stock / *Fino ad esaurimento*

Llave 2 vías tubo rígido serie ligera

2 Way ball-valves: tube connection serie L DIN 2353

Robinet haute pression 2 voies boisseau sphérique pour tube rigide série légère

Rubinetto a sfera maschio DIN 2353 - L -

DN	TUBO PIPE	ROSCA THREAD	Referencia Part n°	€
4	6 L	M12X1,5	**MKH 6 L**	-
6	8 L	M14X1,5	**MKH 8 L**	-
8	10 L	M16X1.5	**MKH 10 L**	-
10	12 L	M18X1.5	**MKH 12 L**	-
13	15 L	M22X1.5	**MKH 15 L**	-
16	18 L	M26X1.5	**MKH 18 L**	-
20	22 L	M30X2	**MKH 22 L**	-
25	28 L	M36X2	**MKH 28 L**	-
25/32	35 L	M45X2	**MKH 35 L**	-
25/40	42 L	M52X2	**MKH 42 L**	-

Llave 2 vías tubo rígido serie pesada

2 Way ball-valves: tube connection serie S DIN 2353

Robinet haute pression 2 voies boisseau sphérique pour tube rigide série lourde

Rubinetto a sfera maschio DIN 2353 - S -

DN	TUBO PIPE	ROSCA THREAD	Referencia Part n°	€
4	8 S	M16X1.5	**MKH 8 S**	-
6	10 S	M18X1.5	**MKH 10 S**	-
8	12 S	M20X1.5	**MKH 12 S**	-
10	14 S	M22X1.5	**MKH 14 S**	-
13	16 S	M24X1.5	**MKH 16 S**	-
13	20 S	M30X2	**MKH 20 S DN13**	-
16	20 S	M30X2	**MKH 20 S**	-
25	30 S	M42X2	**MKH 30 S**	-
20	25 S	M36X2	**MKH 25 S**	-
25/32	38 S	M52X2	**MKH 38 S**	-

Llave 2 vías rosca hembra BSP paso total

Ball-valves BSP female

Robinet haute pression 2 voies boisseau sphérique femelle

Rubinetto a sfera femmina - femmina BSP

DN	ROSCA THREAD	Referencia Part n°	€
32	1" 1/4 BSP	**MKH G 1 1/4 DN32**	-
50	2" BSP	**MKH G 2 DN50**	-

Llave 2 vías tubo rígido L paso total

Ball-valves: tube connection serie L DIN 2353 full bore

Robinet haute pression 2 voies boisseau sphérique Métrique série légère passage total

Rubinetto a sfera maschio DIN 2353 - L -

DN	TUBO PIPE	ROSCA THREAD	Referencia Part n°	€
35	35 L	M45X2	**MKH 35 L DN35**	-

Llave 2 vías tubo rígido S paso total

Ball-valves: tube connection serie S DIN 2353 full bore

Robinet haute pression 2 voies boisseau sphérique Métrique série légère passage total

Rubinetto a sfera maschio DIN 2353 - S -

DN	TUBO PIPE	ROSCA THREAD	Referencia Part n°	€
32	38 S	M52x2	**MKH 38 S DN32**	-

Llave 3 vías hembra - hembra - hembra BSP paso en L

3 Way ball-valve female BSP L flow

Robinet haute pression 3 voies boisseau sphérique femelle BSP passage en L

Rubinetto a sfera 3 vie femmina BSP passaggio in L

DN	ROSCA THREAD	Referencia Part n°	€
4	1/8"BSP	**MK3A-G 1/8**	-
6	1/4"BSP	**MK3A-G 1/4**	-
10	3/8"BSP	**MK3A-G 3/8**	-
13	1/2"BSP	**MK3A-G 1/2**	-
20	3/4"BSP	**MK3A-G 3/4**	-
25	1"BSP	**MK3A-G 1**	-
25	1"1/4 BSP	**MK3A-G 1 1/4**	-
40	1"1/2 BSP	**MK3A-G 1 1/2**	-

LLAVES DE PASO AISI 316

Ball valves AISI 316
Robinets AISI 316
Rubinetti AISI 316

Manetas 1
Handles for ball-valves
Leviers pour robinets
Maniglia

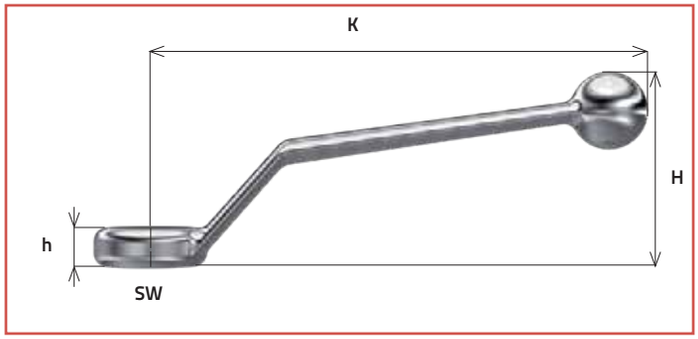

Manetas 2
Handles for ball-valves
Leviers pour robinets
Maniglia

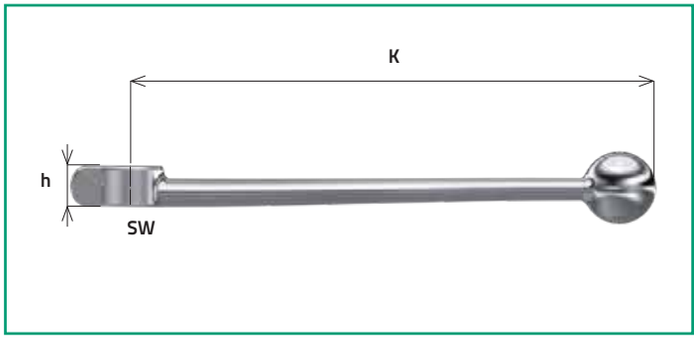

	SW	Zinc Zinc						Aluminio Aluminum			INOX/SS316L			Acero Steel		
Serie BSP 1/8 - 1/4 - 3/8 - 1/2 - 5/8	9	A60013155330* (1)			AR603722*						Z60013155330 *			C600063*		
Serie DIN 6 - 8 - 10 - 12 - 14 - 15 - 16		H	J	K	H	J	K				H	J	K	H	J	K
		45	8.7	155	-	10	155				45	8.7	155	47	9	155
Serie BSP 5/8	12							L501741* (1)								
Serie DIN 18								H	J	K						
								55	12	160						
Serie BSP 3/4 - 1 - 1 1/4	14	A60013155331* (1)						LR606745 *			Z60013155331*			C708618*		
Serie DIN 22 - 25 - 28 - 30 - 35 - 38		H		J			K	H	J	K	H	J	K	H	J	K
		-		13			200	-	12	200	-	13	200	64	12	171
Serie BSP 1 1/4 - 1 1/2 - 2	17							LR801799* (1)			Z60013155332*					
Serie DIN 3 3-5 - 38 - 42								H	J	K	H	J	K			
								-	16	320	-	15	90			

Las llaves se suministran con maneta de zinc o aluminio
Handles for ball-valves are supplied with zinc or aluminum
Leviers pour robinets sont fournies avec une poignée en zinc ou en aluminium
Maniglia sono fornite con manico in zinco o alluminio

(1) **Maneta sumistrada junto a la llave** / Handles are supplied for ball-valves / Leviers sont fournies pour robinets / Maniglia sono fornite con manico

Llaves de paso AISI 316

Ball valves AISI 316
Robinets AISI 316
Rubinetti AISI 316

Llave 2 vías rosca hembra BSP

2 ways ball valve female BSP

Robinet haute pression 2 voies boisseau sphérique femelle BSP

Rubinetto a sfera 2 vie femmina BSP -

DN	ROSCA THREAD	Referencia Part n°	€
4	1/8" BSP	**ZGB2V 1/8**	-
6	1/4" BSP	**ZGB2V 1/4**	-
10	3/8" BSP	**ZGB2V 3/8**	-
13	1/2"BSP	**ZGB2V 1/2**	-
20	3/4" BSP	**ZGB2V 3/4**	-
25	1" BSP	**ZGB2V 1**	-

Llave 2 vías rosca hembra NPT

2 ways ball valve female NPT

Robinet haute pression 2 voies boisseau sphérique femelle NPT

Rubinetto a sfera 2 vie femmina NPT -

DN	ROSCA THREAD	Referencia Part n°	€
6	1/4" NPT	**ZGB2V 1/4 NPT**	-
10	3/8" NPT	**ZGB2V 3/8 NPT**	-
12	1/2" NPT	**ZGB2V 1/2 NPT**	-
19	3/4" NPT	**ZGB2V 3/4 NPT**	-
25	1" NPT	**ZGB2V 1 NPT**	-

Llave 2 vías tubo rígido serie ligera

2 ways ball valve: tube connector light serie

Robinet haute pression 2 voies boisseau sphérique sortie pour tube rigide Série légère

Rubinetto a sfera 2 vie maschio DIN2353 (serie L) -

DN	TUBO PIPE	ROSCA THREAD	Referencia Part n°	€
6	8 L	M14X1,5	**ZGB2V 8 L**	-
8	10 L	M16X1.5	**ZGB2V 10 L**	-
10	12 L	M18X1.5	**ZGB2V 12 L**	-
13	15 L	M22X1.5	**ZGB2V 15 L**	-
16	18 L	M26X1.5	**ZGB2V 18 L**	-
20	22 L	M30X2	**ZGB2V 22 L**	-
25	28L	M36X2	**ZGB2V 28 L**	-

Llave 2 vías tubo rígido serie pesada

2 ways ball valve: tube connector heavy serie

Robinet haute pression 2 voies boisseau sphérique sortie pour tube rigide Série lourde

Rubinetto a sfera 2 vie maschio DIN2353 (serie S) -

DN	TUBO PIPE	ROSCA THREAD	Referencia Part n°	€
4	8 S	M16X1.5	**ZGB2V 8 S**	-
6	10 S	M18X1.5	**ZGB2V 10 S**	-
8	12 S	M20X1.5	**ZGB2V 12 S**	-
10	14 S	M22X1.5	**ZGB2V 14 S**	-
13	16 S	M24X1.5	**ZGB2V 16 S**	-
16	20 S	M30X2	**ZGB2V 20 S**	-
20	25 S	M36X2	**ZGB2V 25 S**	-

Llave 3 vías hembra - hembra - hembra BSP paso en L

3 Way ball-valve female ISO 228

Robinet haute pression 3 voies boisseau sphérique femelle

Rubinetto a sfera 3 vie femmina BSP (passaggio L) -

DN	R1	Referencia Part n°	€
6	1/4" BSP	**ZGB3VH 1/4**	-
10	3/8" BSP	**ZGB3VH 3/8**	-
13	1/2" BSP	**ZGB3VH 1/2**	-
20	3/4" BSP	**ZGB3VH 3/4**	-
25	1" BSP	**ZGB3VH 1**	-

Manetas para llaves de paso

Handles for ball-valves

Leviers pour robinets

Manopole per rubinetti a sfera

TAMAÑO SIZE	Referencia Part n°	€
HEX9	**Z60013155330**	-
HEX14	**Z60013155331**	-
HEX17	**Z60013155332**	-

Ver tabla de dimensiones en pág 243 / *See dimension table in page 243* / Voir table de dimensions à la page 243 / *Vedere tabella di dimensioni a pagina 243*

Racores giratorios AISI 316

Swivel fittings AISI 316
Raccords tournants AISI 316
Giunti girevole AISI 316

Racores giratorios rectos

Straight swivel fittings

Raccord tournant droit

Giunto girevole diritto -

ROSCA THREAD	Referencia Part n°	€
1/4" BSP	**Z GGL 1/4**	-
3/8" BSP	**Z GGL 3/8**	-
1/2 ' BSP	**Z GGL 1/2**	-
3/4" BSP	**Z GGL 3/4**	-
1" BSP	**Z GGL 1**	-
1" 1/4 BSP	**Z GGL 1 1/4**	-
1" 1/2 BSP	**Z GGL 1 1/2**	-
2" BSP	**Z GGL 2**	-

Racores giratorios 90°

Elbow 90° swivel female

Raccord tournant coude 90°

Giunto girevole 90° -

ROSCA THREAD	Referencia Part n°	€
1/4" BSP	**Z GG90 1/4**	-
3/8 ' BSP	**Z GG90 3/8**	-
1/2" BSP	**Z GG90 1/2**	-
3/4 ' BSP	**Z GG90 3/4**	-
1" BSP	**Z GG90 1**	-
1" 1/4 BSP	**Z GG90 1 1/4**	-
1" 1/2 BSP	**Z GG90 1 1/2**	-
2 ' BSP	**Z GG90 2**	-

Componentes hidráulicos AISI 316

249

Hydraulic Components AISI 316
Composants Hydrauliques AISI 316
Componenti Idraulici AISI 316

08

ELEMENTOS DE CONTROL

Control components

Éléments de contrôle

Elementi di controllo

Componentes hidráulicos AISI 316

Hydraulic Components AISI 316
Composants Hydrauliques AISI 316
Componenti Idraulici AISI 316

Reguladores caudal ▪ Flow control valves ▪ Régulateurs de débit ▪ Regolatori di flusso | 249

ZFT2251B

ZFT2253U

ZFT22512B

ZFT22572B

ZFT22575U

Anti-retornos ▪ Check-valves ▪ Clapet antiretour ▪ Valvole di ritegno | 250

Z VSR

Anti-retornos TrΔle® ▪ Check-valves TrΔle® ▪ Clapet antiretour TrΔle® ▪ Valvole di ritegno TrΔle® | 250

ZVT0

Limitadoras ▪ Relief valves ▪ Limiteurs de pression ▪ Valvole de regolazione | 250

ZLIM

Componentes hidráulicos AISI 316

Hydraulic Components AISI 316
Composants Hydrauliques AISI 316
Componenti Idraulici AISI 316

Regulador caudal forjado bidireccional 350 Bar

Forged bidirectional flow control valve 350 Bar

Régulateur débit bidirectionnel forgé 350 Bar

Regolatore di flusso bidirezionale 350 Bar

ROSCA THREAD		CAUDAL MÁX. MAX. FLOW (l/min)	Referencia Part n°	€
1/4" BSP	M17x1	12	**ZFT2251B04**	-
3/8" BSP	M20x1	30	**ZFT2251B06**	-
1/2" BSP	M25x1,5	45	**ZFT2251B08**	-
3/4" BSP	M30x1,5	85	**ZFT2251B12**	-

Regulador caudal forjado unidireccional 350 Bar

Forged unidirectional flow control valve 350 Bar

Régulateur débit unidirectionnel forgé 350 Bar

Regolatore di flusso unidirezionale 350 Bar

ROSCA THREAD		CAUDAL MÁX. MAX. FLOW (l/min)	Referencia Part n°	€
1/4" BSP	M17x1	12	**ZFT2253U04**	-
3/8" BSP	M20x1	30	**ZFT2253U06**	-
1/2" BSP	M25x1,5	45	**ZFT2253U08**	-
3/4" BSP	M30x1,5	85	**ZFT2253U12**	-

Regulador caudal forjado bidireccional macho/hembra 350 Bar

Forged unidirectional flow control valve male/female 350 Bar

Régulateur débit bidirectionnel forgé mâle/femelle 350 Bar

Regolatore di flusso unidirezionale maschio-femmina 350 Bar

ROSCA THREAD		CAUDAL MÁX. MAX. FLOW (l/min)	Referencia Part n°	€
1/8" BSP	M15x1	10	**ZFT22512B02**	-
1/4" BSP	M17x1	13	**ZFT22512B04**	-
3/8" BSP	M20x1	30	**ZFT22512B06**	-
1/2" BSP	M25x1,5	60	**ZFT22512B08**	-
3/4" BSP	M30x1,5	80	**ZFT22512B12**	-

Regulador caudal bidireccional 400 Bar

Bidirectional flow control valve 400 Bar

Régulateur débit bidirectionnel 400 Bar

Regolatore di flusso bidirezionale 400 bar

ROSCA THREAD		CAUDAL MÁX. MAX. FLOW (l/min)	Referencia Part n°	€
1/4" BSP	M20x1	13	**ZFT22572B04**	-
3/8" BSP	M25x1,5	38	**ZFT22572B06**	-
1/2" BSP	M30x1,5	50	**ZFT22572B08**	-
3/4" BSP	M40x1,5	80	**ZFT22572B12**	-
1" BSP	M50x1,5	190	**ZFT22572B16**	-
1"1/4 BSP	M50x1,5	195	**ZFT22572B20**	-
1" 1/2 BSP	M55x2	200	**ZFT22572B24**	-
2" BSP	M65x2	200	**ZFT22572B32**	-

Regulador caudal unidireccional 400 Bar

Unidirectional flow control valve 400 Bar

Régulateur débit unidirectionnel 400 Bar

Regolatore di flusso unidirezionale 400 Bar

ROSCA THREAD		CAUDAL MÁX. MAX. FLOW (l/min)	Referencia Part n°	€
1/8" BSP	M17x1	6	**ZFT22575U02**	-
1/4" BSP	M20x1	14	**ZFT22575U04**	-
3/8" BSP	M25x1,5	20	**ZFT22575U06**	-
1/2" BSP	M30x1,5	45	**ZFT22575U08**	-
3/4" BSP	M40x1,5	80	**ZFT22575U12**	-
1" BSP	M50x1,5	180	**ZFT22575U16**	-
1"1/4 BSP	M50x1,5	200	**ZFT22575U20**	-
1" 1/2 BSP	M55x2	200	**ZFT22575U24**	-
2" BSP	M65x2	200	**ZFT22575U32**	-

Componentes hidráulicos AISI 316

Hydraulic Components AISI 316
Composants Hydrauliques AISI 316
Componenti Idraulici AISI 316

Anti-retorno en línea BSP

NEW

Check-valve line mounting BSP

Clapet antiretour simple en ligne BSP

Valvole di ritegno in linea BSP

ROSCA THREAD	TARAJE (bar) SETTING (bar)	Referencia Part n°	€
1/4" BSP	0,5	**Z VSR 1/4**	-
1/4" BSP	2,5	**Z VSR 1/4-2.5**	-
1/4" BSP	5	**Z VSR 1/4-5**	-
1/4" BSP	10	**Z VSR 1/4-10**	-
3/8" BSP	0,5	**Z VSR 3/8**	-
3/8" BSP	2,5	**Z VSR 3/8-2.5**	-
3/8" BSP	5	**Z VSR 3/8-5**	-
3/8" BSP	10	**Z VSR 3/8-10**	-
1/2" BSP	0,5	**Z VSR 1/2**	-
1/2" BSP	2,5	**Z VSR 1/2-2.5**	-
1/2" BSP	5	**Z VSR 1/2-5**	-
1/2" BSP	10	**Z VSR 1/2-10**	-
3/4" BSP	0,5	**Z VSR 3/4**	-
1" BSP	0,5	**Z VSR 1**	-
1" 1/4 BSP	0,5	**Z VSR 1 1/4**	-
1" 1/2 BSP	0,5	**Z VSR 1 1/2**	-

Para otras presiones de tarado estandard, consultar. */ For other standard spring pressures, consult us. /* Pour d'autres pressions ressort standard, consultez-nous. */ Per altre pressioni di taratura standard, consultare.*

Anti-retornos en línea BSP TrΔle®

Check-valve line mounting BSP TrΔle®

Clapet antiretour simple en ligne BSP TrΔle®

Valvole di ritegno in linea BSP - TrΔle®

ROSCA THREAD	TARAJE (bar) SETTING (bar)	Referencia Part n°	€
1/4" BSP	0,5	**ZVT001004**	-
3/8" BSP	0,5	**ZVT001006**	-
1/2" BSP	0,5	**ZVT001008**	-
3/4" BSP	0,5	**ZVT001012**	-

Para otras presiones de tarado estandard, consultar. */ For other standard spring pressures, consult us. /* Pour d'autres pressions ressort standard, consultez-nous. */ Per altre pressioni di taratura standard, consultare.*

Limitadoras en línea BSP

Relief valves in line BSP

Limiteurs de pression en ligne BSP

Valvola limitatrice in linea BSP

ROSCA THREAD	CAMPO REG, (bar) REG RATE (bar)	CAUDAL MÁX. MAX. FLOW (l/min)	Referencia Part n°	€
1/2" BSP	25-100	40	**ZLIM1225100**	-
1/2" BSP	60-210	40	**ZLIM1260210**	-
1/2" BSP	100-300	40	**ZLIM12100300**	-

No sólo vendemos productos, somos tu proveedor de soluciones

PROYECTOS

DICSA

DICSA

PROJECTS

We are involved in key industrial sectors.

www.dicsaes.com

Racores de control 257
Test couplings
Prises de pression
Prese di pressione

Conexiones Micro-hose 258
Micro-hose fittings
Embouts Capillaire
Raccordi Micro-tubo

Instrumentos de medición 259
Pressure gauges AISI 316 with glycerin
Manomètre AISI 316 avec glycérine
Manometri AISI 316 a bagno di glicerina

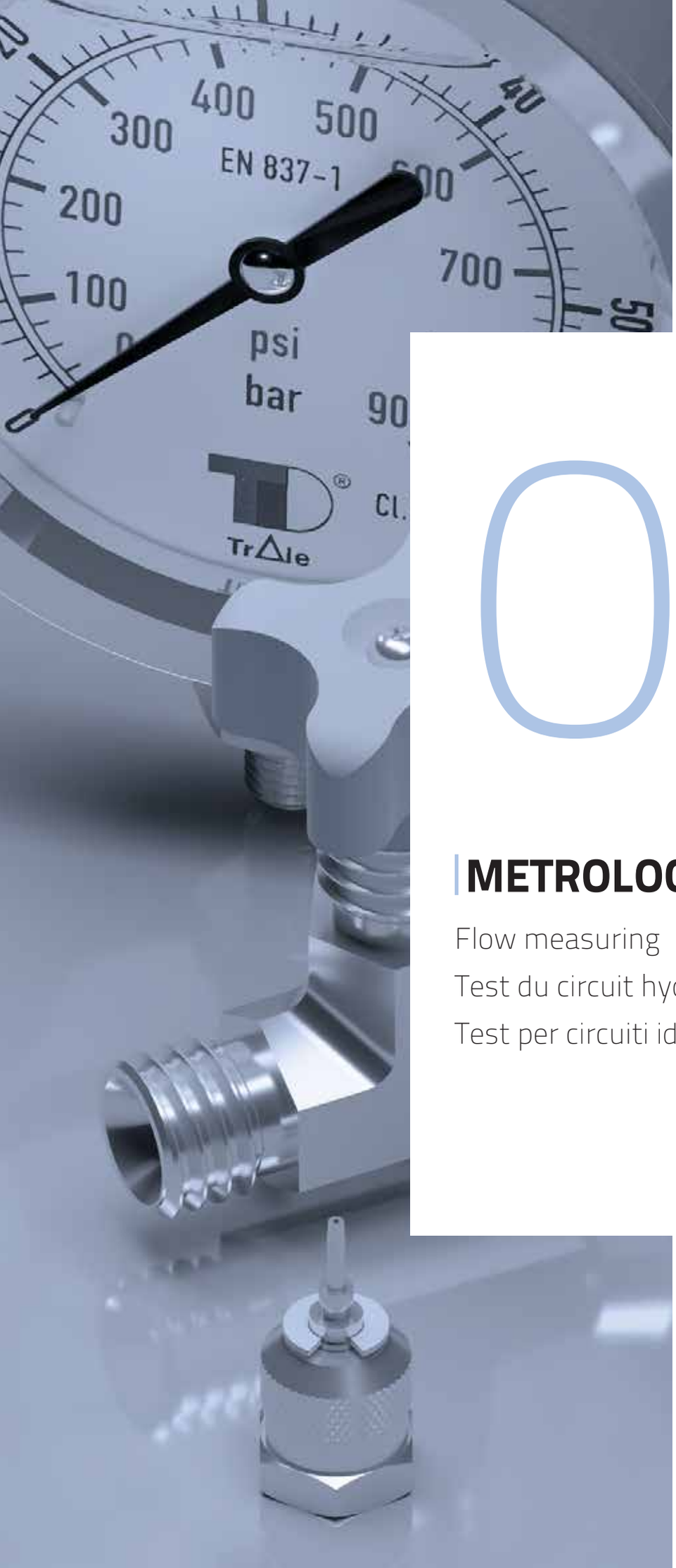

09

METROLOGÍA

Flow measuring

Test du circuit hydraulique

Test per circuiti idraulici

Racores de control

Test couplings
Prises de pression
Prese di pressione

Z MPR...C/J

Z MPR TLM

Z MPR DL/S

Z MPR...NPT

Z MPR M

Conexiones Micro-hose

Micro-hose fittings
Embouts Capillaire
Raccordi Micro-tubo

Z55501

Z55505

Z55506

Z55504

Z55507

Z55503

Z55509

Z5550795

Instrumentos de medición

Pressure gauges AISI 316 with glycerin
Manomètre AISI 316 avec glycérine
Manometri AISI 316 a bagno di glicerina

Manómetros inox glicerina DN 63 ▪ Pressure gauge DN 63 with glycerin ▪ Manomètre avec glycérine DN 63 ▪ Manometro DN 63 a bagno di glicerina | 259

ZMFI63..V

ZMFI63..DB

Manómetros inox glicerina DN 100 ▪ Pressure gauge DN 100 with glycerin ▪ Manomètre avec glycérine DN 100 ▪ Manometro DN 100 a bagno di glicerina | 259

ZMFI100..V

ZMFI100..DB

Protectores manómetros ▪ Valves for manometers ▪ Valves pour manomètres ▪ Esclusori per manometro | 260

Z FPE

Z FPEA

ZFT2299

Racores de control

Test couplings
Prises de pression
Prese di pressione

Racores de control BSP con junta y capuchón metálico

Racores de control BSP con junta y capuchón metálico

Prises de pression avec joint plat et capouchon métallique

Mini-presa di controllo con tappo metallico - maschio BSP con guarnizione

ROSCA THREAD	Referencia Part n°	€
1/8" BSP	**Z MPR 1/8 G**	-
1/4" BSP	**Z MPR 1/4 G**	-
3/8" BSP	**Z MPR 3/8 G**	-
1/2" BSP	**Z MPR 1/2 G**	-

Racores de control TLM con capuchón metálico

Racores de control TLM con capuchón metálico

Prises de pression TLM avec capouchon métallique

Mini-presa di controllo con tappo metallico - femmina girevole metrica 24°

TUBO PIPE	SERIE SERIES	ROSCA THREAD	Referencia Part n°	€
6	L	M12x1.5	**Z MPR TLM 6L**	-
8	L	M14x1.5	**Z MPR TLM 8L**	-
10	L	M16x1.5	**Z MPR TLM 10L**	-
12	L	M18x1.5	**Z MPR TLM 12L**	-
15	L	M22X1,5	**Z MPR TLM 15L**	-
6	S	M14x1.5	**Z MPR TLM 6S**	-
8	S	M16x1.5	**Z MPR TLM 8S**	-
10	S	M18x1.5	**Z MPR TLM 10S**	-
12	S	M20x1.5	**Z MPR TLM 12S**	-

Racor de control intermedio para tubo metálico

Racor de control intermedio para tubo metálico

Raccord intermédiaire pour tube métallique

Mini-presa di controllo con tappo metallico - raccordo intermedio per tubo rigido

TUBO PIPE	SERIE SERIES	ROSCA THREAD	Referencia Part n°	€
6	L	M12X1,5	**Z MPR DL 6**	-
8	L	M14X1,5	**Z MPR DL 8**	-
10	L	M16X1,5	**Z MPR DL 10**	-
12	L	M18X1,5	**Z MPR DL 12**	-
15	L	M22X1,5	**Z MPR DL 15**	-
18	L	M26X1,5	**Z MPR DL 18**	-
22	L	M30X2	**Z MPR DL 22**	-
28	L	M36X2	**Z MPR DL 28**	-
35	L	M45X2	**Z MPR DL 35**	-
42	L	M52X2	**Z MPR DL 42**	-
6	S	M14X1,5	**Z MPR DS 6**	-
8	S	M16X1,5	**Z MPR DS 8**	-
10	S	M16X1,5	**Z MPR DS 10**	-
12	S	M18X1,5	**Z MPR DS 12**	-
14	S	M22X1,5	**Z MPR DS 14**	-
16	S	M24X1,5	**Z MPR DS 16**	-
20	S	M30X2	**Z MPR DS 20**	-
25	S	M36X2	**Z MPR DS 25**	-
30	S	M42X2	**Z MPR DS 30**	-
38	S	M52X2	**Z MPR DS 38**	-

Racores de control NPT con capuchón metálico

Racores de control NPT con capuchón metálico

Prises de pression NPT avec capouchon métallique

Mini-presa di controllo con tappo metallico - maschio NPT

ROSCA THREAD	Referencia Part n°	€
1/8" NPT	**Z MPR 1/8 NPT**	-
1/4" NPT	**Z MPR 1/4 NPT**	-
3/8" NPT	**Z MPR 3/8 NPT**	-

Racores de control Métrico con Junta y capuchón metal

Racores de control Métrico con Junta y capuchón metal

Prises de pression métrique avec joint plat et capouchon métallique

Mini-presa di controllo con tappo metallico - maschio metrico con guarnizione

ROSCA THREAD	Referencia Part n°	€
M10X1.5	**Z MPR M 10X1.5**	-
M12X1.5	**Z MPR M 12X1.5**	-
M14X1.5	**Z MPR M 14X1.5**	-
M16X1.5	**Z MPR M 16X1.5**	-

Conexiones Micro-hose

Micro-hose fittings
Embouts Capillaire
Raccordi Micro-tubo

Casquillos AISI-303

Casquillos AISI-303

Jupes AISI-303

Boccola per micro-tubo (AISI-303)

DN	Referencia Part n°	€
2	**Z555010100**	-

Hembra asiento plano con junta manómetro

Hembra asiento plano con junta manómetro

Embout femelle tournante fond plat avec o'ring pour manomètre Minimess

Femmina sede piana con o'ring per manometro

DN	ROSCA THREAD	Referencia Part n°	€
2	1/4" BSP	**Z555050404**	-
2	1/2" BSP	**Z555050808**	-

Hembra giratoria de control

Hembra giratoria de control

Embout femelle tournante de control Métrique Minimess

Presa di pressione femmina

DN	ROSCA THREAD	Referencia Part n°	€
2	M16X2	**Z555069523**	-

Hembra giratoria BSP 60°

Hembra giratoria BSP 60°

Embout femelle tournante gaz cyl BSP 60° Minimess

Femmina girevole BSP 60°

DN	ROSCA THREAD	Referencia Part n°	€
2	1/8" BSP	**Z555040202**	-
2	1/4" BSP	**Z555040404**	-
2	3/8" BSP	**Z555040606**	-

Espiga lisa Métrica

Espiga lisa Métrica

Embout lisse Métrique Minimess

Estremitá tubolare Metrica

DN	TUBO PIPE	Referencia Part n°	€
2	6	**Z555070600**	-
2	8	**Z555070800**	-

Macho de control

Macho de control

Embout mâle manomètre

Presa di pressione maschio

DN	Referencia Part n°	€
2	**Z555030325**	-

Hembra giratoria recta JIC 37°

Hembra giratoria recta JIC 37°

Embout femelle tournante JIC 37° Minimess

Femmina diritta JIC 37°

DN	ROSCA THREAD	Referencia Part n°	€
2	7/16" 20h UNF	**Z555090700**	-

Hembra giratoria Métrica con Junta

Hembra giratoria Métrica con Junta

Embout femelle tournante de control Métrique 24° avec o´ring

Presa di pressione femmina metrica 24° con o´ring

DN	TUBO PIPE	ROSCA THREAD	Referencia Part n°	€
2	6L	M12X1,5	**Z555079510**	-
2	6S	M14X1,5	**Z555079511**	-
2	8L	M14X1,5	**Z555079512**	-
2	8S	M16X1,5	**Z555079523**	-
2	10L	M16X1,5	**Z555079525**	-

Instrumentos de medición

Pressure gauges AISI 316 with glycerin
Manomètre AISI 316 avec glycérine
Manometri AISI 316 a bagno di glicerina

Manómetros DN 63 salida vertical

Manómetros DN 63 salida vertical

Manomètre DN 63 sortie verticale

Manometro DN 63 radiale

ROSCA THREAD	ESCALA (bar) SCALE (bar)	Referencia Part n°	€
1/4" BSP	0-2.5	ZMFI6304002.5V	-
1/4" BSP	0-4	ZMFI6304004V	-
1/4" BSP	0-6	ZMFI6304006V	-
1/4" BSP	0-10	ZMFI6304010V	-
1/4" BSP	0-16	ZMFI6304016V	-
1/4" BSP	0-25	ZMFI6304025V	-
1/4" BSP	0-40	ZMFI6304040V	-
1/4" BSP	0-60	ZMFI6304060V	-
1/4" BSP	0-100	ZMFI6304100V	-
1/4" BSP	0-160	ZMFI6304160V	-
1/4" BSP	0-250	ZMFI6304250V	-
1/4" BSP	0-400	ZMFI6304400V	-
1/4" BSP	0-600	ZMFI6304600V	-

Manómetros DN 63 dorsal

Manómetros DN 63 dorsal

Manomètre DN 63 sortie arrière

Manometro DN 63 assiale flangiato

ROSCA THREAD	ESCALA (bar) SCALE (bar)	Referencia Part n°	€
1/4" BSP	0-2.5	ZMFI63042.5DB	-
1/4" BSP	0-10	ZMFI6304010DB	-
1/4" BSP	0-16	ZMFI6304016DB	-
1/4" BSP	0-25	ZMFI6304025DB	-
1/4" BSP	0-60	ZMFI6304060DB	-
1/4" BSP	0-160	ZMFI6304160DB	-
1/4" BSP	0-250	ZMFI6304250DB	-
1/4" BSP	0-400	ZMFI6304400DB	-

Manómetros DN 100 salida vertical

Manómetros DN 100 salida vertical

Manomètre DN 100 sortie verticale

Manometro DN 100 radiale

ROSCA THREAD	ESCALA (bar) SCALE (bar)	Referencia Part n°	€
1/2" BSP	0-6	ZMFI10008006V	-
1/2" BSP	0-10	ZMFI10008010V	-
1/2" BSP	0-16	ZMFI10008016V	-
1/2" BSP	0-25	ZMFI10008025V	-
1/2" BSP	0-40	ZMFI10008040V	-
1/2" BSP	0-60	ZMFI10008060V	-
1/2" BSP	0-100	ZMFI10008100V	-
1/2" BSP	0-160	ZMFI10008160V	-
1/2" BSP	0-250	ZMFI10008250V	-
1/2" BSP	0-400	ZMFI10008400V	-
1/2" BSP	0-600	ZMFI10008600V	-

Manómetros DN 100 dorsal

Manómetros DN 100 dorsal

Manomètre DN 100 sortie arrière

Manometro DN 100 assiale flangiato

ROSCA THREAD	ESCALA (bar) SCALE (bar)	Referencia Part n°	€
1/4" BSP	0-160	ZMFI10004160DB	*
1/2" BSP	0-1	ZMFI10008001DB	-
1/2" BSP	0-4	ZMFI10008004DB	-
1/2" BSP	0-6	ZMFI10008006DB	-
1/2" BSP	0-10	ZMFI10008010DB	-
1/2" BSP	0-16	ZMFI10008016DB	-
1/2" BSP	0-25	ZMFI10008025DB	-
1/2" BSP	0-40	ZMFI10008040DB	-
1/2" BSP	0-60	ZMFI10008060DB	-
1/2" BSP	0-100	ZMFI10008100DB	-
1/2" BSP	0-160	ZMFI10008160DB	-
1/2" BSP	0-250	ZMFI10008250DB	-
1/2" BSP	0-400	ZMFI10008400DB	-

MANÓMETROS CALIBRADOS BAJO CONSULTA

CALIBRATED MANOMETER ON REQUEST

***Consultar** / On request/ **Sur demande** / Su richiesta

Instrumentos de medición

Pressure gauges AISI 316 with glycerin
Manomètre AISI 316 avec glycérine
Manometri AISI 316 a bagno di glicerina

Protector manómetro recto

Protector manómetro recto

Isolateur de manomètre droit (en ligne)

Esclusore per manometro diritto

ROSCA THREAD		Referencia Part n°	€
1/4" BSP	1/4" BSPT	**Z FPE 1G 1/4**	-

Protector manómetro 90°

Protector manómetro 90°

Isolateur de manomètre coudé a 90° (en ligne)

Esclusore per manometro a 90°

ROSCA THREAD		Referencia Part n°	€
1/4" BSP	1/4" BSPT	**Z FPEA 1G 1/4**	-

Adaptador para manómetro en línea TL-MF

Adaptador para manómetro en línea TL-MF

Adapteur pour manomètre (en ligne) TL-MF

Esclusore per manometro maschio BSPT - femmina girevole BSP

ROSCA (/M) THREAD (M)	ROSCA (H) THREAD /F)	Referencia Part n°	€
1/4" BSP	1/4" BSPT	**ZFT229904**	-
1/2" BSP	1/2" BSPT	**ZFT229908**	-

CALIDAD para conseguir el mejor RENDIMIENTO.

DICSA

QUALITY guarantees the BEST PERFORMANCE.

MARINE EQUIPMENT DIRECTIVE DNV 2014/90/EU

TYPE APPROVED PRODUCT DNV DNV.COM/AF

ABS TYPE APPROVED PRODUCT

Emisión de certificados. Certificates Issuance.
Certificados de prueba. Test Certificates.
Validación de diseños. Design Validation Tests.
Controles de calidad. Quality Control.

Máquina de medición 3D MMC
Machine Measuring by Coordinates (MMC)

Cortadora de precisión
Precision cutting Saw

Banco de prueba Bimal B1703 Flex
B1703 FLEX Dynamic Test Bench

Banco de prueba Bimal BI1001
Bimal BI1001 Test Bench

Análisis espectrográfico
Spectrographic Analyzer

Banco de pruebas BE 2500 II
BE 2500 II Test Bench

Cámara de niebla salina
Salt- spray chamber

Abrasímetro
Abrasion Tester

www.dicsaes.com

Racor Doble Anillo

267

Twin Ferrule Fittings
Raccords double bague
Raccordi per doppio anello

10

RACOR DOBLE ANILLO

Twin Ferrule Fittings

Raccords double bague

Raccordi per doppio anello

Racor Doble Anillo TrΔle® LOK

Twin Ferrule Fittings TrΔle® LOK
Raccords double bague TrΔle® LOK
Raccordi per doppio anello TrΔle® LOK

Tuercas y anillos ▪ Nuts and rings ▪ Écrous et bagues ▪ Dadi e anelli | 267

ZKN ZKAP ZKAF

Uniones tubo-tubo ▪ Straight couplings ▪ Raccords union double ▪ Raccordi intermedi | 268

ZKI ZKL ZKI ZKT ZKC

Uniones rectas tubo-rosca macho ▪ Straight male stud couplings ▪ Raccords union simple mâle ▪ Raccordi di estremitá diritti | 270

ZKIMP ZKIM

Codos tubo-rosca ▪ Male stud elbows ▪ Raccords coude mâle gaz ▪ Raccordi di estremitá a 90° | 271

ZKLMP ZKLM

TES rosca central ▪ Male stud branch ▪ Raccords Té mâle central ▪ Raccordi di estremitá a T | 272

ZKTMP

TES rosca lateral ▪ Male stud barrel ▪ Raccords Té mâle latéral ▪ Raccordi di estremitá a L | 272

ZKTLMP

Pasatabiques ▪ Bulkhead ▪ Raccords passe cloison ▪ Raccordi di attraversamento | 272

ZKIB ZKIBP

Racor recto hembra ▪ Straight female coupling ▪ Raccords droits femelle ▪ Raccordi diritti con estremitá femmina | 273

ZKIHP ZKIH

Tapones ▪ Plugs ▪ Raccords bouchon métrique ▪ Tappi | 274

ZKOH ZKOM

Racor Doble Anillo TrΔle® LOK

Twin Ferrule Fittings TrΔle® LOK
Raccords double bague TrΔle® LOK
Raccordi per doppio anello TrΔle® LOK

Conectores para tubo ▪ Pipe connector ▪ Connecteur de tuyau ▪ Connettore per tubi | 274

ZKIA

ZKIAMP

ZKIAHP

TRΔLE® LOK SERIES

INFORMACIÓN DE CODIFICACIÓN / *CODIFICATION INFORMATION*

1 EJEMPLO- EXAMPLE

ZKTK

ZK: DICSA TRΔLE® LOK SERIES

T: FIGURA (RACOR EN TE)/ ***FIGURE (TE UNION)***

02: Ø Tubo (02 = 1/8") ***Ø Tube (02 = 1/8")***

2 EJEMPLO- EXAMPLE

ZKIMP0202

ZK: DICSA TRΔLE® LOK SERIES

IM: RACOR RECTO ROSCA TUBO/ ***STRAIGHT MALE STUD***

P02: MACHO 1/8" NPT ***MALE 1/8" NPT***

02: Ø Tubo (02 = 1/8") ***Ø Tube (02 = 1/8")***

REF / CODE	DESCRIPCION / DESCRIPTION
ZKN	Tuercas / *Nuts*
ZKAP	Anillo trasero / *Back Ferrule*
ZKAF	Anillo frontal / *Front Ferrule*
ZKI	Unión recta / *Straight Union*
ZKL	Unión en codo / *Elbow Union*
ZKT	Unión en T / *Tee Union*
ZKC	Unión en cruz / *Cross Union*
ZKIM	Unión recta tubo-rosca / *Straight male stud*
ZKLMP	Codo tubo - rosca / *Male stud elbow*
ZKTMP	T tubo - rosca / *Male stud T*
ZKTLM	L tubo - rosca / *Male stud L*
ZKIB	Pasatabiques recto / *Straight bukhead*
ZKIBP	Pasatabiques tubo-rosca/ *Male stud bulkhead*
ZKIHP	Unión tubo-rosca hembra/ *Straight female stud*
ZKOH	Tapón hembra / *Cap*
ZKOM	Tapón macho / *Plug*
ZKIA	Reductor tubo / *Pipe Reducer*
ZKIAH	Adap. hembra / *Female adapter*
ZKIMP	Adap macho / *Male adapter*

DESIGNACIÓN DE TUBO EXTERIOR/ *TUBE O.D. DESIGNATOR*

TUBO EN PULGADAS/ *FRACTIONAL TUBE*								TUBO MÉTRICO / *METRIC TUBE*										
1/8"	1/4"	5/16"	3/8"	1/2"	5/8"	3/4"	1"	6	8	10	12	14	15	16	18	20	22	25
02	04	05	06	08	10	12	16	06M	08M	10M	12M	14M	15M	16M	18M	20M	22M	25M

Racor Doble Anillo TrΔle® LOK

Twin Ferrule Fittings
Raccords double bague
Raccordi per doppio anello

Tuercas para doble anillo

Nut for twin-ferrule

Écrou double bagues

Dado per doppia ghiera

TUBO PIPE	Referencia Part n°	€
1/8"	ZKN02	-
1/4"	ZKN04	-
5/16"	ZKN05	-
3/8"	ZKN06	-
1/2"	ZKN08	-
5/8"	ZKN10	-
3/4"	ZKN12	-
1"	ZKN16	-
6	ZKN06M	-
8	ZKN08M	-
10	ZKN10M	-
12	ZKN12M	-
14	ZKN14M	-
15	ZKN15M	-
16	ZKN16M	-
18	ZKN18M	-
20	ZKN20M	-
22	ZKN22M	-
25	ZKN25M	-

Anillo frontal

Front Ferrule

Bague avant

Ghiera frontale

TUBO PIPE	Referencia Part n°	€
1/8"	ZKAF02	-
1/4"	ZKAF04	-
5/16"	ZKAF05	-
3/8"	ZKAF06	-
1/2"	ZKAF08	-
5/8"	ZKAF10	-
3/4"	ZKAF12	-
1"	ZKAF16	-
6	ZKAF06M	-
8	ZKAF08M	-
10	ZKAF10M	-
12	ZKAF12M	-
14	ZKAF14M	-
15	ZKAF15M	-
16	ZKAF16M	-
18	ZKAF18M	-
20	ZKAF20M	-
22	ZKAF22M	-
25	ZKAF25M	-

Anillo posterior

Back Ferrule

Bague arrière

Indietro ghiera

TUBO PIPE	Referencia Part n°	€
1/8"	ZKAP02	-
1/4"	ZKAP04	-
5/16"	ZKAP05	-
3/8"	ZKAP06	-
1/2"	ZKAP08	-
5/8"	ZKAP10	-
3/4"	ZKAP12	-
1"	ZKAP16	-
6	ZKAP06M	-
8	ZKAP08M	-
10	ZKAP10M	-
12	ZKAP12M	-
14	ZKAP14M	-
15	ZKAP15M	-
16	ZKAP16M	-
18	ZKAP18M	-
20	ZKAP20M	-
22	ZKAP22M	-
25	ZKAP25M	-

*Consultar / On request/ Sur demande / Su richiesta

Racor Doble Anillo TrΔle® LOK

Twin Ferrule Fittings
Raccords double bague
Raccordi per doppio anello

Racor unión recta tubo - tubo

Double Straight coupling

Raccord union double

Raccordo intermedio diritto

TUBO PIPE	Referencia Part n°	€
1/8"	ZKI02	-
1/4"	ZKI04	-
5/16"	ZKI05	-
3/8"	ZKI06	-
1/2"	ZKI08	-
5/8"	ZKI10	-
3/4"	ZKI12	-
1"	ZKI16	-
6	ZKI06M	-
8	ZKI08M	-
10	ZKI10M	-
12	ZKI12M	-
14	ZKI14M	-
15	ZKI15M	-
16	ZKI16M	-
18	ZKI18M	-
20	ZKI20M	-
22	ZKI22M	-
25	ZKI25M	-

Racor unión en codo tubo - tubo

Equal elbow coupling

Raccord coude égal

Raccordo intermedio a 90°

TUBO PIPE	Referencia Part n°	€
1/8"	ZKL02	-
1/4"	ZKL04	-
5/16"	ZKL05	-
3/8"	ZKL06	-
1/2"	ZKL08	-
5/8"	ZKL10	-
3/4"	ZKL12	-
1"	ZKL16	-
6	ZKL06M	-
8	ZKL08M	-
10	ZKL10M	-
12	ZKL12M	-
14	ZKL14M	-
15	ZKL15M	-
16	ZKL16M	-
18	ZKL18M	-
20	ZKL20M	-
22	ZKL22M	-
25	ZKL25M	-

Racor unión recta en reducción tubo - tubo

Straight reducing coupling

Raccord union double en réduction

Raccordo di riduzione

TUBO PIPE		Referencia Part n°	€
1/4"	1/8"	ZKI0402	-
5/16"	1/4"	ZKI0504	-
3/8"	1/8"	ZKI0602	-
3/8"	1/4"	ZKI0604	-
1/2"	1/4"	ZKI0804	-
1/2"	3/8"	ZKI0806	-
5/8"	3/8"	ZKI1006	-
5/8"	1/2"	ZKI1008	-
3/4"	1/4"	ZKI1204	-
3/4"	3/8"	ZKI1206	-
3/4"	1/2"	ZKI1208	-
1"	1/2"	ZKI1608	-
1"	3/4"	ZKI1612	-
6	3	ZKI06M03M	-
8	6	ZKI08M06M	-
10	6	ZKI10M06M	-
10	8	ZKI10M08M	-
12	6	ZKI12M06M	-
12	8	ZKI12M08M	-
12	10	ZKI12M10M	-
16	12	ZKI16M12M	-
18	12	ZKI18M12M	-
25	18	ZKI25M18M	-
25	20	ZKI25M20M	-

Racor unión en T tubo - tubo

Equal Tee

Raccord Té égal

Raccordo intermedio a T

TUBO PIPE	Referencia Part n°	€
1/8"	ZKT02	-
1/4"	ZKT04	-
5/16"	ZKT05	-
3/8"	ZKT06	-
1/2"	ZKT08	-
5/8"	ZKT10	-
3/4"	ZKT12	-
1"	ZKT16	-
6	ZKT06M	-
8	ZKT08M	-
10	ZKT10M	-
12	ZKT12M	-
14	ZKT14M	-
15	ZKT15M	-
16	ZKT16M	-
18	ZKT18M	-
20	ZKT20M	-
22	ZKT22M	-
25	ZKT25M	-

*Consultar / On request / Sur demande / Su richiesta

Racor Doble Anillo TrΔle® LOK

Twin Ferrule Fittings
Raccords double bague
Raccordi per doppio anello

Racor unión en cruz tubo - tubo

Equal cross

Raccord croix égale

Raccordo intermedio a croce

TUBO PIPE	Referencia Part n°	€
1/8"	ZKC02	-
1/4"	ZKC04	-
5/16"	ZKC05	-
3/8"	ZKC06	-
1/2"	ZKC08	-
6	ZKC06M	-
8	ZKC08M	-
10	ZKC10M	-
12	ZKC12M	-

TrΔle® Lok SERIES

*Consultar / On request/ Sur demande / Su richiesta

Racor Doble Anillo TrΔle® LOK

Twin Ferrule Fittings
Raccords double bague
Raccordi per doppio anello

Racor recto rosca cónica NPT

Straight male stud coupling NPT

Raccord union simple mâle NPT

Raccordo di estremitá diritto NPT

TUBO PIPE	ROSCA THREAD	Referencia Part n°	€
1/16"	1/8"	ZKIMP0102	-
1/8"	1/16"	ZKIMP0201	-
1/8"	1/8"	ZKIMP0202	-
1/8"	1/4"	ZKIMP0204	-
1/8"	3/8"	ZKIMP0206	-
1/8"	1/2"	ZKIMP0208	-
1/4"	1/8"	ZKIMP0402	-
1/4"	1/4"	ZKIMP0404	-
1/4"	3/8"	ZKIMP0406	-
1/4"	1/2"	ZKIMP0408	-
3/8"	1/8"	ZKIMP0602	-
3/8"	1/4"	ZKIMP0604	-
3/8"	3/8"	ZKIMP0606	-
3/8"	1/2"	ZKIMP0608	-
3/8"	3/4"	ZKIMP0612	-
3/8"	1"	ZKIMP0616	-
1/2"	1/8"	ZKIMP0802	-
1/2"	1/4"	ZKIMP0804	-
1/2"	3/8"	ZKIMP0806	-
1/2"	1/2"	ZKIMP0808	-
1/2"	3/4"	ZKIMP0812	-
3/4"	3/8"	ZKIMP1206	-
3/4"	1/2"	ZKIMP1208	-
3/4"	3/4"	ZKIMP1212	-
3/4"	1/4"	ZKIMP1216	-
1"	1/2"	ZKIMP1608	-
1"	3/4"	ZKIMP1612	-
1"	1"	ZKIMP1616	-
6	1/8"	ZKIMP06M02	-
6	1/4"	ZKIMP06M04	-
6	3/8"	ZKIMP06M06	-
6	1/2"	ZKIMP06M08	-
8	1/8"	ZKIMP08M02	-
8	1/4"	ZKIMP08M04	-
8	3/8"	ZKIMP08M06	-
8	1/2"	ZKIMP08M08	-
10	1/8"	ZKIMP10M02	-
10	1/4"	ZKIMP10M04	-
10	3/8"	ZKIMP10M06	-
10	1/2"	ZKIMP10M08	-
10	3/4"	ZKIMP10M12	-
12	1/4"	ZKIMP12M04	-
12	3/8"	ZKIMP12M06	-
12	1/2"	ZKIMP12M08	-
14	3/8"	ZKIMP14M06	-
14	1/2"	ZKIMP14M08	-
15	1/2"	ZKIMP15M08	-
16	1/4"	ZKIMP16M04	-
16	3/8"	ZKIMP16M06	-
16	1/2"	ZKIMP16M08	-
16	3/4"	ZKIMP16M12	-
18	1/2"	ZKIMP18M08	-
18	3/4"	ZKIMP18M12	-
22	3/4"	ZKIMP22M12	-
22	1"	ZKIMP22M16	-
25	1/2"	ZKIMP25M08	-
25	3/4"	ZKIMP25M12	-
25	1"	ZKIMP25M16	-

Racor recto rosca cónica BSPT

Straight male stud coupling BSPT

Raccord union simple mâle conique BSPT

Raccordo di estremitá diritto conico BSPT

TUBO PIPE	ROSCA THREAD		Referencia Part n°	€
1/8	1/8"		ZKIM0202	-
1/8	1/4"		ZKIM0204	-
1/4"	1/8		ZKIM0402	-
1/4"	1/4"		ZKIM0404	-
1/4"	3/8"		ZKIM0406	-
1/4"	1/2"		ZKIM0408	-
3/8"	1/8"		ZKIM0602	-
3/8"	1/4"		ZKIM0604	-
3/8"	3/8"		ZKIM0606	-
3/8"	1/2"		ZKIM0608	-
3/8"	3/4"		ZKIM0612	-
1/2"	1/4"		ZKIM0804	-
5/8"	1/2"	NEW	ZKIM1008	-
1/2"	3/8"		ZKIM0806	-
1/2"	1/2"		ZKIM0808	-
1/2"	3/4"		ZKIM0812	-
3/4"	3/4"		ZKIM1212	-
3/4"	1"		ZKIM1216	-
1"	3/4"		ZKIM1612	-
6	1/8"		ZKIM06M02	-
6	1/4"		ZKIM06M04	-
6	3/8"		ZKIM06M06	-
6	1/2"		ZKIM06M08	-
8	1/8"		ZKIM08M02	-
8	1/4"		ZKIM08M04	-
8	3/8"		ZKIM08M06	-
8	1/2"		ZKIM08M08	-
10	1/8"		ZKIM10M02	-
10	1/4"		ZKIM10M04	-
10	3/8"		ZKIM10M06	-
10	1/2"		ZKIM10M08	-
12	1/4"	NEW	ZKIM12M04	-
12	3/8"		ZKIM12M06	-
12	1/2"		ZKIM12M08	-
16	1/4"		ZKIM16M04	-
16	3/8"		ZKIM16M06	-
16	1/2"		ZKIM16M08	-
16	3/4"		ZKIM16M12	-
18	1/2"		ZKIM18M08	-
18	3/4"		ZKIM18M12	-
22	3/4"		ZKIM22M12	-
22	1"		ZKIM22M16	-
25	3/4"		ZKIM25M12	-
25	1"		ZKIM25M16	-
25	1/2"		ZKIM25M08	-

*Consultar / On request / Sur demande / Su richiesta

Racor Doble Anillo TrΔle® LOK

Twin Ferrule Fittings
Raccords double bague
Raccordi per doppio anello

Racor en codo rosca cónica NPT

Male stud elbow NPT

Raccord union coude mâle NPT

Raccordo di estremitá a 90° NPT

TUBO PIPE	ROSCA THREAD	Referencia Part n°	€
1/8"	1/8"	ZKLMP0202	-
1/8"	1/4"	ZKLMP0204	-
1/8"	3/8"	ZKLMP0206	-
1/4"	1/8"	ZKLMP0402	-
1/4"	1/4"	ZKLMP0404	-
1/4"	3/8"	ZKLMP0406	-
1/4"	1/2"	ZKLMP0408	-
3/8"	1/8"	ZKLMP0602	-
3/8"	1/4"	ZKLMP0604	-
3/8"	3/8"	ZKLMP0606	-
3/8"	1/2"	ZKLMP0608	-
3/8"	3/4"	ZKLMP0612	-
1/2"	1/4"	ZKLMP0804	-
1/2"	3/8"	ZKLMP0806	-
1/2"	1/2"	ZKLMP0808	-
3/4"	1/2"	ZKLMP1208	-
3/4"	3/4"	ZKLMP1212	-
1"	3/4"	ZKLMP1612	-
1"	1"	ZKLMP1616	-
16	1/4"	ZKLMP16M04	-
16	3/8"	ZKLMP16M06	-
6	1/8"	ZKLMP06M02	-
6	1/4"	ZKLMP06M04	-
16	1/2"	ZKLMP16M08	-
16	3/4"	ZKLMP16M12	-
6	3/8"	ZKLMP06M06	-
6	1/2"	ZKLMP06M08	-
8	1/8"	ZKLMP08M02	-
8	1/4"	ZKLMP08M04	-
8	3/8"	ZKLMP08M06	-
8	1/2"	ZKLMP08M08	-
10	1/8"	ZKLMP10M02	-
10	1/4"	ZKLMP10M04	-
10	3/8"	ZKLMP10M06	-
10	1/2"	ZKLMP10M08	-
12	1/4"	ZKLMP12M04	-
12	3/8"	ZKLMP12M06	-
12	1/2"	ZKLMP12M08	-
12	3/4"	ZKLMP12M12	-
18	1/2"	ZKLMP18M08	-
18	3/4"	ZKLMP18M12	-
22	3/4"	ZKLMP22M12	-
22	1"	ZKLMP22M16	-
25	3/4"	ZKLMP25M12	-
25	1"	ZKLMP25M16	-

Racor en codo rosca cónica BSPT

Male stud elbow BSPT

Raccord union coude mâle gaz conique

Raccordo di estremitá a 90° conico BSPT

TUBO PIPE	ROSCA THREAD		Referencia Part n°	€
1/4"	1/8"	NEW	ZKLM0402	-
1/4"	1/4"		ZKLM0404	-
1/4"	3/8"		ZKLM0406	-
1/4"	1/2"		ZKLM0408	-
3/8"	1/4"	NEW	ZKLM0604	-
3/8"	3/8"		ZKLM0606	-
3/8"	1/2"		ZKLM0608	-
1/2"	1/4"	NEW	ZKLM0804	-
1/2"	3/8"	NEW	ZKLM0806	-
1/2"	1/2"		ZKLM0808	-
6	1/4"		ZKLM06M04	-
6	1/2"		ZKLM06M08	-
8	1/8"	NEW	ZKLM08M02	-
8	1/4"	NEW	ZKLM08M04	-
8	3/8"		ZKLM08M06	-
8	1/2"		ZKLM08M08	-
10	1/8"	NEW	ZKLM10M02	-
10	1/4"		ZKLM10M04	-
10	3/8"		ZKLM10M06	-
10	1/2"		ZKLM10M08	-
12	1/4"	NEW	ZKLM12M04	-
12	3/8"		ZKLM12M06	-
12	1/2"	NEW	ZKLM12M08	-
16	1/4"		ZKLM16M04	-
16	3/8"		ZKLM16M06	-
16	1/2"		ZKLM16M08	-
16	3/4"		ZKLM16M12	-
22	3/4"		ZKLM22M12	-
22	1"		ZKLM22M16	-

*Consultar / On request/ Sur demande / Su richiesta

Racor Doble Anillo TrΔle® LOK

Twin Ferrule Fittings
Raccords double bague
Raccordi per doppio anello

Racor en T rosca cónica NPT

Male stud branch TEE NPT

Raccord TÉ mâle NPT au centre

Raccordo di estremitá a T NPT

TUBO PIPE	ROSCA THREAD	Referencia Part n°	€
1/8"	1/8"	ZKTMP0202	-
1/8"	1/4"	ZKTMP0204	-
1/4"	1/8"	ZKTMP0402	-
1/4"	1/4"	ZKTMP0404	-
3/8"	1/4"	ZKTMP0604	-
3/8"	3/8"	ZKTMP0606	-
1/2"	3/8"	ZKTMP0806	-
1/2"	1/2"	ZKTMP0808	-
6	1/8"	ZKTMP06M02	-
6	1/4"	ZKTMP06M04	-
8	1/8"	ZKTMP08M02	-
8	1/4"	ZKTMP08M04	-
10	1/4"	ZKTMP10M04	-
10	3/8"	ZKTMP10M06	-
12	1/4"	ZKTMP12M04	-
12	3/8"	ZKTMP12M06	-
12	1/2"	ZKTMP12M08	-

Racor en L rosca cónica NPT

Male stud barrel TEE NPT

Raccord Té mâle NPT latéral Inox

Raccordo di estremitá a L NPT conico

TUBO PIPE	ROSCA THREAD	Referencia Part n°	€
1/8"	1/8"	ZKTLMP0202	-
1/8"	1/4"	ZKTLMP0204	-
1/4"	1/8"	ZKTLMP0402	-
1/4"	1/4"	ZKTLMP0404	-
3/8"	1/4"	ZKTLMP0604	-
3/8"	3/8"	ZKTLMP0606	-
1/2"	3/8"	ZKTLMP0806	-
1/2"	1/2"	ZKTLMP0808	-
6	1/8"	ZKTLMP06M02	-
6	1/4"	ZKTLMP06M04	-
8	1/8"	ZKTLMP08M02	-
8	1/4"	ZKTLMP08M04	-
10	1/4"	ZKTLMP10M04	-
10	1/2"	ZKTLMP10M08	-
12	1/4"	ZKTLMP12M04	-
12	3/8"	ZKTLMP12M06	-
12	1/2"	ZKTLMP12M08	-

Racor recto pasatabique con tuerca

Straight bulkhead coupling

Raccord droit union double passe cloison avec écrou

Raccordo passaparete

TUBO PIPE	Referencia Part n°	€
1/8"	ZKIB02	-
1/4"	ZKIB04	-
5/16"	ZKIB05	-
3/8"	ZKIB06	-
1/2"	ZKIB08	-
5/8"	ZKIB10	-
3/4"	ZKIB12	-
1"	ZKIB16	-
6	ZKIB06M	-
8	ZKIB08M	-
10	ZKIB10M	-
12	ZKIB12M	-
15	ZKIB15M	-
16	ZKIB16M	-
18	ZKIB18M	-
20	ZKIB20M	-
25	ZKIB25M	-

Racor recto - NPT pasatabique con tuerca

Straight bulkhead coupling- NPT

Raccord droit union double passe cloison avec écrou - NPT

Raccordo passaparete - NPT

TUBO PIPE	ROSCA THREAD	Referencia Part n°	€
1/8"	1/8"	ZKIBP0202	-
1/4"	1/4"	ZKIBP0404	-
3/8"	3/8"	ZKIBP0606	-
1/2"	1/2"	ZKIBP0808	-
3/4"	3/4"	ZKIBP1212	-
1"	1"	ZKIBP1616	-
6	1/8"	ZKIBP06M02	-
8	1/4"	ZKIBP08M04	-
10	3/8"	ZKIBP10M06	-
12	1/2"	ZKIBP12M08	-

*Consultar / On request / Sur demande / Su richiesta

Racor Doble Anillo TrΔle® LOK

Twin Ferrule Fittings
Raccords double bague
Raccordi per doppio anello

Racor recto hembra rosca NPT

Female stud coupling NPT

Raccord union simple femelle NPT

Raccordo diritto femmina NPT

TUBO PIPE	ROSCA THREAD	Referencia Part n°	€
1/8"	1/8"	ZKIHP0202	-
1/8"	1/4"	ZKIHP0204	-
1/8"	3/8"	ZKIHP0206	-
1/8"	1/2"	ZKIHP0208	-
1/4"	1/8"	ZKIHP0402	-
1/4"	1/4"	ZKIHP0404	-
1/4"	3/8"	ZKIHP0406	-
1/4"	1/2"	ZKIHP0408	-
3/8"	1/8"	ZKIHP0602	-
3/8"	1/4"	ZKIHP0604	-
3/8"	3/8"	ZKIHP0606	-
3/8"	1/2"	ZKIHP0608	-
3/8"	3/4"	ZKIHP0612	-
1/2"	1/8"	ZKIHP0802	-
1/2"	1/4"	ZKIHP0804	-
1/2"	3/8"	ZKIHP0806	-
1/2"	1/2"	ZKIHP0808	-
5/8"	1/2"	ZKIHP1008	-
3/4"	1/2"	ZKIHP1208	-
3/4"	3/4"	ZKIHP1212	-
1"	3/4"	ZKIHP1612	-
1"	1"	ZKIHP1616	-
6	1/8"	ZKIHP06M02	-
6	1/4"	ZKIHP06M04	-
6	3/8"	ZKIHP06M06	-
6	1/2"	ZKIHP06M08	-
8	1/8"	ZKIHP08M02	-
8	1/4"	ZKIHP08M04	-
8	3/8"	ZKIHP08M06	-
8	1/2"	ZKIHP08M08	-
10	1/4"	ZKIHP10M04	-
10	3/8"	ZKIHP10M06	-
10	1/2"	ZKIHP10M08	-
12	1/4"	ZKIHP12M04	-
12	3/8"	ZKIHP12M06	-
12	1/2"	ZKIHP12M08	-
16	1/2"	ZKIHP16M08	-
20	3/4"	ZKIHP20M12	-
22	3/4"	ZKIHP22M12	-
25	3/4"	ZKIHP25M12	-
25	1"	ZKIHP25M16	-
2"	2"	ZKIHP3232	-

Racor recto hembra rosca BSPT

NEW

Female stud coupling BSPT

Raccord union simple femelle BSPT

Raccordo diritto femmina BSPT

TUBO PIPE	ROSCA THREAD	Referencia Part n°	€
1/4"	1/4"	ZKIH0404	-
1/2"	1/4"	ZKIH0804	-
1/2"	1/2"	ZKIH0808	-
6	1/8"	ZKIH06M02	-
6	1/4"	ZKIH06M04	-
8	1/4"	ZKIH08M04	-
8	1/2"	ZKIH08M08	-
10	1/4"	ZKIH10M04	-
20	3/4"	ZKIH20M12	-

Válvulas de instrumentación

Válvulas de aguja, Manifold, Antirretornos y Válvulas limitadoras de presión

BAJO CONSULTA

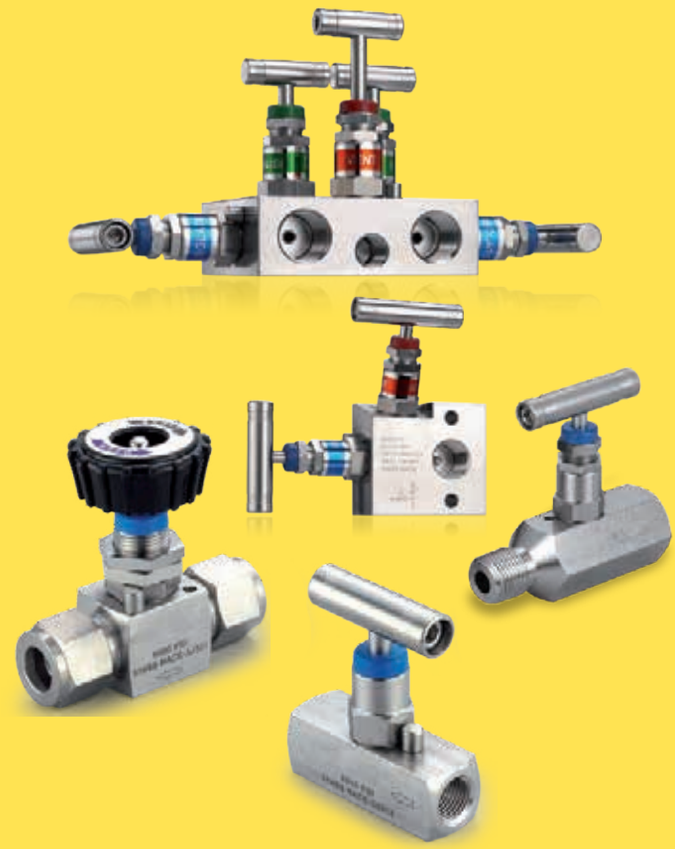

Instrument Valve

Needle Valve, Manifold,
Check and Proportional Relief Valve

ON REQUEST

***Consultar** / On request/ **Sur demande** / Su richiesta

Racor Doble Anillo

Twin Ferrule Fittings
Raccords double bague
Raccordi per doppio anello

Tapón de cierre hembra UNF

UNF plug closure

Bouchon de fermeture Femelle UNF

Tappo di chiusura femmina UNF

TUBO PIPE	Referencia Part n°	€
1/8"	ZKOH02	-
1/4"	ZKOH04	-
5/16"	ZKOH05	-
3/8"	ZKOH06	-
1/2"	ZKOH08	-
5/8"	ZKOH10	-
3/4"	ZKOH12	-
1"	ZKOH16	-
6	ZKOH06M	-
8	ZKOH08M	-
10	ZKOH10M	-
12	ZKOH12M	-
14	ZKOH14M	-
15	ZKOH15M	-
16	ZKOH16M	-
18	ZKOH18M	-
20	ZKOH20M	-
22	ZKOH22M	-
25	ZKOH25M	-

Tapón hexagonal macho UNF

UNF cap hexagon

Bouchon mâle hexagonale UNF

Tappo esagonale maschio UNF

TUBO PIPE	Referencia Part n°	€
1/8"	ZKOM02	-
1/4"	ZKOM04	-
5/16"	ZKOM05	-
3/8"	ZKOM06	-
1/2"	ZKOM08	-
5/8"	ZKOM10	-
3/4"	ZKOM12	-
1"	ZKOM16	-
6	ZKOM06M	-
8	ZKOM08M	-
10	ZKOM10M	-
12	ZKOM12M	-
14	ZKOM14M	-
15	ZKOM15M	-
16	ZKOM16M	-
18	ZKOM18M	-
20	ZKOM20M	-
22	ZKOM22M	-
25	ZKOM25M	-

Racor de Reducción tubo

Tube end reducer

Raccord de réduction

Raccordo di riduzione tubo

TUBO PIPE		Referencia Part n°	€
1/4"	1/8"	ZKIA0402	-
3/8"	1/4"	ZKIA0604	-
1/2"	3/8"	ZKIA0806	-
3/4"	1/2"	ZKIA1208	-
8	6	ZKIA08M06M	-
10	8	ZKIA10M08M	-
12	10	ZKIA12M10M	-
16	12	ZKIA16M12M	-

Adaptador macho NPT

Male NPT adaptor

Adapteur Mâle NPT

Adattatore NPT maschio

TUBO PIPE	ROSCA THREAD	Referencia Part n°	€
1/8"	1/8"	ZKIAMP0202	-
1/4"	1/4"	ZKIAMP0404	-
3/8"	3/8"	ZKIAMP0606	-
1/2"	1/2"	ZKIAMP0808	-
6	1/8"	ZKIAMP06M02	-
8	1/4"	ZKIAMP08M04	-
10	1/4"	ZKIAMP10M04	-
10	3/8"	ZKIAMP10M06	-
10	1/2"	ZKIAMP10M08	-
12	1/2"	ZKIAMP12M08	-

Adaptador hembra NPT

Female NPT adaptor

Adapteur Femelle NPT

Adattatore NPT femmina

TUBO PIPE	ROSCA THREAD	Referencia Part n°	€
1/8"	1/8"	ZKIAHP0202	-
1/4"	1/4"	ZKIAHP0404	-
3/8"	3/8"	ZKIAHP0606	-
1/2"	1/2"	ZKIAHP0808	-
6	1/8"	ZKIAHP06M02	-
8	1/4"	ZKIAHP08M04	-
10	3/8"	ZKIAHP10M06	-
12	1/2"	ZKIAHP12M08	-

*Consultar / On request / Sur demande / Su richiesta

DESCUBRE nuestras TARIFAS GENERALES de PRECIOS

DICSA

Conducciones hidráulicas y neumáticas
Hydraulic & Pneumatic Connectors

Componentes Hidráulicos y Neumáticos
Hydraulic and Pneumatic Components

REQUEST OUR GENERAL PRICE LIST

www.dicsaes.com

Condiciones de venta

General conditions of sale

GENERALIDADES

Estas condiciones así como las eventuales condiciones especiales acordadas en el contrato rigen para todas las entregas y todas las prestaciones. Las condiciones de compra del cliente que sean distintas a las aquí establecidas no llegarán a formar parte del contrato al aceptar el pedido. Los contratos se celebran, salvo en el caso de que se haya acordado lo contrario, mediante confirmación escrita del proveedor. En ningún caso, las Condiciones Generales y/o Especificas de Compra del Comprador, anularan o sustituirán estas Condiciones Generales de Venta.

La aceptación de nuestras ofertas implica tácitamente la de todas las condiciones aquí detalladas, salvo las especiales acordadas por escrito, particularmente en la misma Oferta o detalladas en nuestro acuse de recepción de pedido, únicos documentos que nos obligan ante el Cliente.

DICSA se reserva el derecho de propiedad y el derecho de propiedad intelectual de muestras, presupuestos, planos e información en forma material o inmaterial así como en forma electrónica; el acceso de terceros a éstos ha de impedirse.

OFERTAS Y PEDIDOS

Los precios se entienden, caso de no expresar lo contrario para mercadería situada en nuestro almacén, incluyendo el cargado de ésta, pero sin incluir el embalaje ni el transporte al lugar de recepción, ni impuestos –que serán siempre a cargo del comprador–, así como tampoco la puesta en marcha en el emplazamiento. Todas las operaciones de transporte, seguro, manutención y entrega son a cuenta y riesgo del Comprador.

Las ofertas incluyen solamente los materiales y artículos en ellas especificados disponibles en stock salvo agotamiento y por el plazo de validez determinado en las mismas.

Los estudios u ofertas de material están basados en los precios vigentes en la fecha de su realización, y si, debido a alteraciones en el coste de los materiales, modificación de aranceles o a cualquier otra causa, el nivel de precios fuese revisado, los precios que se aplicarían serían aquellos que rijan en la fecha del suministro, a menos que la oferta sea aceptada dentro del plazo de validez que en la misma se fije.

Los precios no incluyen, excepto notificación expresa, el montaje y la puesta en marcha de los materiales suministrados, los fluidos recomendados por los servicios técnicos de los fabricantes, los contenedores tanto rígidos como elásticos de los materiales, así como el estudio de implantación de los distintos materiales.

DICSA podrá variar el precio, como consecuencia de cualquier ley que afecte a materiales, salarios o a las horas de trabajo y también a posible cambios en la paridad de la moneda, en elementos de importación.

Los pedidos no serán tomados en consideración a menos que vengan acompañados de la cantidad a cuenta prevista en nuestra Oferta, si así se ha establecido.

La aceptación de la Oferta supondrá igualmente la aceptación sin reservas de estas Condiciones Generales de Venta.

ESTUDIOS, PLANOS Y DISEÑOS

La información relacionada con la oferta, tal como planos, diseños, dibujos catálogos y/u otra documentación técnica, es solamente informativa y tienen como objeto dar una imagen general de los materiales en ellos descritos, no formando parte del contrato a menos que haya habido algún acuerdo por escrito. DICSA no aceptará ningún tipo de responsabilidad por la inexactitud u omisión de dicha documentación.

El Cliente deberá hacer siempre un estudio previo de compatibilidad y de montaje de los elementos en su instalación y será el único responsable de la puesta en conformidad de dicha instalación con las distintas reglamentaciones vigentes.

En presupuestos, planos, esquemas y otras informaciones técnicas, mantendremos reservado el derecho de propiedad y de realización, no permitiendo que estos sean facilitados a terceros sin nuestro previo consentimiento escrito.

DICSA se reserva el derecho de propiedad de la mercancía suministrada hasta el pago completo del precio establecido. DICSA se reserva el derecho de propiedad de los planos de la mercancía, que no serán facilitados ni vendidos a terceros en ningún caso.

TRABAJOS *IN SITU*

Los presupuestos de los trabajos realizados en el lugar de la obra del cliente son considerados orientativos, debido a las características particulares y especiales que pueden representar, no pudiendo dar lugar, excepto acuerdo definitivo entre las partes, en precios definitivos.

REPARACIÓN

Los trabajos de reparación no se empezarán hasta la aceptación escrita, por parte del Cliente, del presupuesto y de las condiciones que se establezcan.

En el supuesto de que el presupuesto no sea aceptado por el Cliente en el plazo de un mes, los gastos derivados del desmontaje, almacenaje, peritaje y portes correrán a cargo del Cliente. Si el Cliente solicita la reparación antes de aceptar el presupuesto, los trabajos se llevarán a cabo lo antes posible y, por su parte, el Cliente deberá aceptar el coste final de la reparación.

GENERAL TERMS

These conditions, together with the eventual specific conditions accorded in the contract, apply to all deliveries and all services. The purchase conditions of the customer, if different from those herein established, will not be part of the contract on having accepted the order.

The contracts are concluded, unless otherwise agreed upon by the Parties in writing, by means of written confirmation of the supplier. The General Conditions and / or Specific Conditions of Purchase of the Buyer, cannot, in no case, cancel or replace these General Conditions of Sale.

The acceptance of our offers implies tacitly the acceptance of all the conditions detailed herein, except the special ones that have the agreement in writing, particularly in the same offer or detailed in our accuse of receipt of order, the only documents that oblige us before the Customer. DICSA has the right of property and the right of intellectual property of samples, budgets, technical documentation and information in material or immaterial form as well as in electronic form; the access of third parties to these documents must be forbidden.

OFFERS AND ORDERS

Except in case of having expressed the opposite, the prices include the merchandise placed in our store, including its loading, but without including the packing nor the transport to the place of receipt, nor taxes, nor the getting started - these will always be at the expense of the customer. All the operations of transport, insurance, handling and delivery are on the account and risk of the Customer.

The offers include only the materials and products expressed in them, available in stock until end of stock, with the term of validity expressed in the same offers.

The studies or offers of material are based on the prices on the date the offer was made, and if, due to changes in the cost of the materials, modification of duties or to any other reason, the level of prices was checked, the prices that would be applied would be those that apply in the date of the delivery, unless the offer is accepted in the term of validity expressed in it.

The prices do not include, unless specific notification, the assembly and the getting started of the supplied materials, the fluids recommended by the technical services of the suppliers, the containers of the materials, as well as the study of the setting up of the different materials. DICSA may change the price, as a consequence of any law that concerns materials, wages, or the working hours, but also as a consequence of probable changes in the parity of the currency since it concerns the elements of import.

The orders will not be taken in consideration unless they are provided with the specific amount in our account, foreseen in our Offer, if this condition has been pre-established. The acceptance of the Offer will suppose equally the acceptance without reserve of these General Conditions of Sale.

STUDIES, TECHNICAL DOCUMENTATION

The information related to the offer, as technical documentation, designs, drawings, catalogues and / or any other technical documentation, is only informative and they have as object to give a general image of the materials described in them, they do not form a part of the contract unless written agreement. DICSA will not accept any type of responsibility for inaccuracy or omission of the above mentioned documentation.

The Customer will always have to do a previous study of compatibility and of assembly of the elements in his installation and will be the only responsible for the putting in conformity of the above mentioned installation with the current regulations. In offers, drawings, schemes and other technical information, we reserve ourselves the right of property and of design, not allowing that these should be facilitated to third parties without our previous written assent.

DICSA retains the property of the supplied merchandise until full payment of the agreed price. DICSA also retains the property of the Product's project, which in no circumstances shall be disclosed or sold to third parties.

THE ASSEMBLIES AT THE LOCATION (PLANT) OF THE CUSTOMER

The offers of the assemblies done for the customer, in his elected location of work, are considered as an estimate (approximate calculation), due to the particular and special characteristics that they can represent, not being able to give place, except final agreement between the parts, to final prices.

REPAIRMENT

The works of repair will not begin until written acceptance, on the part of the Customer, of the offer and of the conditions established in it. Supposing that the offer is not accepted by the Customer within one month, the expenses derived from the disassembly, storage, survey and freightage will be chargeable to the Customer. If the Customer requests the repair before accepting the offer, the assemblies will be carried out as soon as possible and, for his part, the Customer will have to accept the final cost of the repair.

In case of delivery of new products in exchange for the repair, if this one was out of guarantee, the Customer will have to accept the payment corresponding to it. The budgets of repair are always as estimation and should not be considered as final prices.

Condiciones de venta

General conditions of sale

En caso de entregarse productos nuevos a cambio de la reparación, si esta estuviera fuera de garantía el Cliente deberá aceptar el cargo correspondiente a la misma.

Los presupuestos de reparación siempre son orientativos y en ningún caso deben tomarse como precios finales.

PLAZOS DE ENTREGA

DICSA se reserva la facultad de rechazar un pedido en función de la disponibilidad de los productos. En este supuesto, lo comunicara al comprador con la mayor brevedad posible.

El plazo de entrega será acordado por las partes contractuales. Los plazos de entrega se calcularán desde la fecha de recepción de la confirmación del pedido, pudiendo DICSA proceder sin interrupción alguna. DICSA no será responsable de las demoras en el suministro de toda o parte de la mercancía en el caso de fuerza mayor, tal como catástrofes naturales, limitaciones legales, huelgas, etc., o cualquier otra causa fuera de nuestro control. En el caso de darse alguna de las razones anteriormente citadas, el periodo de entrega se hará extensible al mismo período de tiempo que dure la causa que haya motivado el retraso. Sin embargo, si el período excediera de seis meses, DICSA podrá cancelar la parte no enviada notificando previamente por escrito al comprador.

Procuramos con el mayor interés, cumplir los plazos de entrega que se indican en nuestras ofertas o en nuestras confirmaciones de pedido, si bien es materialmente imposible responder plenamente de dicho cumplimiento, por depender de otros proveedores y de inesperadas circunstancias totalmente ajenas a nuestro posible control.

De ahí que no se aceptarán sanciones por demora en la entrega prevista.

DERECHO DE PROPIEDAD

DICSA mantiene la propiedad de la mercancía hasta que el comprador realice el pago por completo de la misma.

Será responsabilidad del comprador tomar las medidas necesarias para conservar en buen estado la mercancía hasta que haya sido pagada, debiendo asegurarse a DICSA el cobro de la misma en caso de haber sido vendida a terceras personas por el comprador.

GARANTÍA

No se responderá de ninguna reclamación que no sea efectuada dentro de los 12 meses siguientes a la entrega de la mercancía, ni se aceptarán devoluciones sin autorización previa o pasados 15 días desde la entrega de la mercancía. En cualquier caso, toda devolución deberá ir acompañada de copia de nuestra autorización y, siempre que no sea por causas imputables a DICSA, conllevará un recargo mínimo del 20 % sobre el coste del material devuelto, corriendo todos los gastos a cargo del cliente.

En relación con los defectos que aparezcan en los productos suministrados, DICSA aceptará como única responsabilidad u obligación, abonar la pieza o piezas defectuosas siempre que la mercancía haya sido tratada adecuadamente y que los defectos surgidos sean debidos a defectos de material o fabricación.

La garantía comprende la reposición o reparación de los elementos defectuosos a realizar en nuestros talleres.

La garantía se entiende siempre con el material presumiblemente defectuoso depositado en nuestras instalaciones, con los gastos de transporte y riesgo a cargo del comprador.

Los consejos y asesoramiento dados antes y post cierre del contrato, se realizan con la mejor intención y según nuestros máximos conocimientos, no obstante DICSA no asume ninguna clase de responsabilidades a este respecto, ni responderá de los eventuales daños directos o indirectos que indistintamente, por quién, dónde y por qué puedan producirse.

DICSA no será responsable de ninguna consecuencia o ningún daño indirecto producido al Comprador o a terceros, incluyendo los daños de pérdida de oportunidades, negocio o ingresos.

DICSA garantiza exclusivamente sus materiales excluyendo cualquier responsabilidad por los efectos o perjuicios que estos puedan provocar en instalaciones, maquinarias o circuitos. En ningún caso se responsabilizará de los accidentes personales o materiales y pérdidas de producción.

Se excluye de la garantía las averías producidas por mal uso o deficiente instalación, averías provocadas por sometimiento de los equipos a esfuerzos anormales con fines experimentales, de ajuste o prueba. La total responsabilidad de DICSA por los daños causados, independientemente del tipo de acción o teoría de la responsabilidad, no excederá del importe de la obra, instalación o materiales que haya sido objeto de pedido a DICSA. Cualquier importe que supere dicha cantidad y que DICSA se vea obligada a soportar ya sea por decisión judicial, arbitral o similar, será repetida a la compradora hasta lograr indemnidad.

Se encuentran excluidos de esta garantía:

- El uso de instalaciones o servicios, que se aparten de los manuales de instrucción o especificaciones de DICSA.
- El uso inadecuado de instalaciones o negligencia del Comprador, sus Ayudantes o Agentes.
- Las partes suministradas por el Comprador.

DELIVERY TERMS

DICSA saves itself the right to reject an order depending on the availability of the products. In this supposition, DICSA will communicate it to the Customer as promptly as possible.

The delivery time has to be approved by the contractual parts. The delivery time will be calculated from the date of receipt of the confirmation of the order, when DICSA will be able to proceed without any interruption. DICSA will not be responsible for the delays in the supply of all or in part of the goods in case of major force, such as natural catastrophes, legal limitations, strikes, etc., or any other reason beyond our control. In case of any of the reasons previously mentioned, the period of delivery will be extensible to the same period of time that lasts the reason that has motivated the delay. Nevertheless, if the period exceeds six months, DICSA may cancel the part that couldn't be sent, by previously notifying the Customer in writing.

We do our best to respect the delivery times that are indicated in our offers or in our order confirmations, though it is materially impossible to answer completely for the above mentioned fulfillment, since we depend on other suppliers and on unexpected circumstances totally foreign to our possible control. Won't be accepted any sanctions for the delay in the foreseen delivery.

RIGHT OF PROPERTY

DICSA maintains the property of the materials (products) until the Customer makes the payment in full of the merchandise.

The Customer is responsible for taking the necessary actions to preserve in good condition the merchandise until it has been paid, must insure DICSA of the payment of the same one in case of having being sold to third persons by the Customer.

WARRANTY

We won't attend any claim done after the 12 months following the delivery of the merchandise. Returned material will not be allowed without previous authorization or when the time between the purchase and the request for return exceeds 15 days.

In any case, all returned merchandise will have to be accompanied by a copy of our authorization and, providing that it is not for reasons attributable to DICSA, will carry a minimal surcharge of 20 % on the cost of the returned material, all the expenses will be charged to the customer. Concerning the faults that appear in the supplied products, DICSA will only accept as unique responsibility or obligation, the paying of the product or defective products providing that the products (merchandise) have been treated adequately and that the arisen faults are due to faults of material or manufacture.

The warranty includes the replacement or repair of the defective elements in our workshops. The warranty is understood always in relation with the presumably defective material deposited in our warehouse, but the costs of transport and the risk being at the expense of the Customer. The advices given before and post closing of the contract, are made with the best intention and according to our know-how, nevertheless DICSA does not assume any category of responsibilities in this regard, nor will answer of the eventual direct or indirect damages that could take place indistinctly, no matter who, where and why they may take place.

DICSA will not be responsible for any consequence or indirect damages occurred to the Customer, and / or third Parties including but not limited to loss of opportunities, business and incomes.

DICSA guarantees exclusively its own materials, excluding any responsibility for the effects or damages that these could provoke in facilities, equipments or conductions. In no case will take responsibility for accidents related to individuals or materials or for losses in fabrication.

The warranty excludes the breakdowns produced by badly use or deficient installation, breakdowns provoked by overloading of the equipments for experimental purposes, either for adjustment or testing. DICSA's total responsibility for the caused damages, independently of the type of action or theory of the responsibility, will not exceed the amount of the work done, installation or materials that have been object of the order to DICSA.

Any amount that exceeds the above mentioned quantity, and any amount that DICSA will have to support either for judicial, arbitral or similar decision, will be transmitted to the Customer until obtaining indemnity.

Will be excluded from this warranty:

- *The use of facilities or services, which are different of those included in the manuals of instruction or in DICSA's specifications.*
- *The inadequate use of facilities or negligence of the Customer, his Assistants or Agents.*
- *The parts supplied by the Customer.*

FREIGHTAGES

By merchandise we always mean the one deposited in DICSA's warehouse, even in operations conditioned by the delivery at destination and the merchandise will always travel at the account and risk of the Customer, being at his charge, including the additional insurances that could be established and the special permissions it may need. According to what it is established in the article 18 of the Royal decree 782/1998 concerning wrapping and packaging mentioned in the 1st additional Disposition (Regulation) of the Law 11/1997, the person responsible for the delivery of the residues of the packaging and worn packages, for the correct environmental management, will be the final user.

Condiciones de venta

General conditions of sale

PORTES

La mercancía se entiende siempre depositada en el domicilio de DICSA, incluso en operaciones condicionadas a la entrega en destino y la mercancía siempre viajará por cuenta y riesgo del comprador, siendo a su cargo inclusive los seguros adicionales que pudieran establecerse y los permisos especiales a que hubiera lugar.

Según se establece en el artículo 18 del Real Decreto 782/1998 para los envases y embalajes acogidos a la Disposición adicional 1.ª de la Ley 11/1997, el responsable de la entrega de los residuos de los embalajes y envases usados, para su correcta gestión ambiental, será el usuario final.

ENVÍOS DE EMERGENCIA

Sea cual fuere el medio de transporte utilizado, avión, courier, régimen de equipajes, agencias especiales, mensajeros etc. Independientemente del importe de dicho servicio, el comprador correrá con todos los gastos extra, los de acarreos, de desplazamientos, y de comunicaciones que el servicio haya ocasionado, sin que en ningún caso este valor pueda ser inferior a 60 euros.

PEDIDOS ESPECIALES

Todo pedido de material especial, conllevará el pago anticipado del 50 % del importe del pedido, como condición indispensable para su aceptación. Dicho importe quedará siempre a favor de DICSA como indemnización en cualquier caso de anulación por parte del comprador, sin perjuicio de las reclamaciones que por Ley se puedan tener derecho.

VENTA MÍNIMA

La facturación mínima será de 50 € sea cual sea el importe del pedido.

PAGOS

Los pagos se realizarán como máximo y salvo acuerdo expreso entre las partes, a 60 días desde la fecha de la factura y previa recepción de los informes positivos de crédito. Si el comprador no efectuare el pago de cualquiera de los suministros a su vencimiento, DICSA está autorizado a suspender los envíos posteriores hasta que se realice dicho pago. Cualquier cargo bancario asociado con el pago de la mercancía, así como los gastos de devolución de efectos en caso de impago, serán por cuenta del comprador.

En caso de demora en el pago y sin perjuicio de otros derechos atribuidos al comprador por la legislación en vigor, el comprador abonará a DICSA un interés de demora del 2 % mensual desde la fecha de vencimiento de la factura.

COBRO DE LETRAS O RECIBOS DEVUELTOS O APLAZADOS

Serán a cargo del librado:

- Gastos de devolución.
- Intereses del 1 % mensual desde el día del vencimiento fallido hasta la fecha de cobro definitivo.
- Posible valor del timbre de nuevos documentos.
- Prima de seguro de crédito.

PAGOS COINCIDENTES EN VACACIONES

Si el cliente no pudiese atender los pagos que coincidiesen con periodos vacacionales, éstos se trasladarán al mismo día del mes anterior. En caso de existir días fijos de pago, el vencimiento se trasladará al día hábil de pago inmediatamente anterior.

USO DE SOFTWARE

En la medida en que el volumen de entrega incluye la puesta a disposición de software, el cliente tiene el derecho no exclusivo a usarla incluyendo la documentación adjunta. Se le cede el software para el uso en el objeto de entrega al cual va destinado. No se admite el uso de este software en otro sistema. La modificación, traducción o adaptación de código de objeto a código de origen así como la reproducción de software solamente se admite en la medida legalmente establecida. El cliente se compromete a no retirar las indicaciones del fabricante, especialmente indicaciones del Copyright sin el consentimiento previo de DICSA. Todos los demás derechos sobre el software y la documentación incluyendo las copias, corresponden a DICSA o al proveedor del software. No se admite la concesión de sublicencias.

DERECHO APLICABLE Y JURISDICCIÓN

Las relaciones jurídicas entre DICSA y el comprador están sujetas al derecho Español. El tribunal competente será el del domicilio de DICSA. Sin embargo, DICSA podrá optar por interponer las acciones legales correspondientes en el domicilio del comprador.

EMERGENCY DELIVERIES

No matter the type of the transportation used: by plane, courier, as baggage (luggage), special agencies, messengers etc; independently of the amount of the above mentioned service, the Customer will pay all the extra expenses, those of transportations, of shipping, and of communications that the service has caused; this value may not, under no circumstance, be lower than 60 euros.

SPECIAL ORDERS

Any order (request) of special material, will carry the anticipated payment of 50 % of the amount of the order (request), as an indispensable condition for its acceptance. The above mentioned amount will always be in favor of DICSA as compensation in case of cancellation on the part of the Customer, without prejudice of the claims at which they may have right by Law.

MINIMAL SALE

The minimal invoice will be of 50 €, no matter the amount of the order.

PAYMENTS

The payments have to be done, except express written agreement between the parts, in maximum 60 days from the date of the invoice and previous receipt of the positive reports of credit. If the Customer doesn't make the payment in time, for a part of the merchandise supplied, DICSA is authorized to suspend the posterior deliveries until the Customer executes the due payments. Any bank charges associated with the payment of the merchandise, as well as the expenses of return of it in case of non-payment, will be at the expense of the Customer. In case of delay in the payment and without prejudice of other rights attributed to the buyer for the legislation in effect, the Customer will pay to DICSA an interest of monthly delay of 2 % starting from the date when the invoice comes to its term.

UNPAID OR POST-PONED INVOICES

Will be at the expense of the Customer:

- *The return expenses.*
- *Monthly interests of 1 %, from the day when the payment has come to its term and wasn't made, until the date of full payment.*
- *Possible amount (value) of the stamp of the new documents.*
- *The credit insurance.*

COINCIDENTAL PAYMENTS IN VACATIONS

If the client could not attend to the payments that were coinciding with vacation periods, these will move to the same day of the previous month. In case there are fixed days of payment, the term of the invoice will move to the immediately previous working day of payment.

THE SOFTWARE USE

If the delivery includes the putting at the disposal of the Customer software, the Customer has the exclusive right to use it, including the attached documentation. The software is sent for the use in the object of delivery to which it is destined. It is forbidden the use of this software into any other system. The modification, translation or adjustment of the code of object to code of origin as well as the reproduction of software is only admitted into the legally established limits. The Customer promises not to withdraw the indications of the manufacturer, especially the indications of the Copyright, without DICSA's previous assent. All the other rights on the software and the documentation including the copies, they belong to DICSA or to the supplier of the software. The concession of sublicenses is not admitted.

GOVERNING LAW AND JURISDICTION

These General Conditions and any agreement between DICSA and the Customer shall be exclusively governed by Spanish laws. The exclusive jurisdiction on any dispute between the DICSA and the Customer shall be the courts of DICSA's domicile. Nevertheless, DICSA has also the right to bring legal action against the Customer before the courts of the place of business and/or residence of the Customer.

Información general

General information

DICSA ESPAÑA
Sede | Head Office

Tel. +34 976 46 10 46
info@dicsaes.com

DICSA ITALIA SRL

Tel. +39 059 820 179
italia@dicsaes.com

DICSA AMERICA

Tel. 786 358 6662
america@dicsaes.com

DICSA DEUTSCHLAND

Tel. +34 976 464 106
export@dicsaes.com

DICSA LATAM

Tel. +34 976 464 106
america@dicsaes.com

DICSA ASIA PACIFIC

Tel. +34 976 464 106
asia-pacific@dicsaes.com

DICSA TÜRKIYE

Tel. +90 533 080 67 08
turkiye@dicsaes.com

Atención al cliente | Customer service

Departamento comercial | Commercial department

Nacional | National
Tel. 976 464 108
comercial@dicsaes.com

Internacional | International
Tel. +34 976 464 106
export@dicsaes.com

Gestión de pedidos | Orders management

Nacional | National
Conducciones | Connectors
Tel. 976 464 100
976 464 101
Hidráulica | Components
Tel. 976 464 102
pedidos@dicsaes.com

Internacional | International
Tel. +34 976 464 100
+34 976 464 101
orders@dicsaes.com

Otros servicios | Other services

Dpto. Calidad | Quality Dpt.
Tel. +34 976 479 545
calidad@dicsaes.com

Dpto. Informática | IT Dpt.
Tel. +34 976 479 555
informatica@dicsaes.com

Dpto. Producción | Production Dpt.
Tel. +34 976 479 543
produccion@dicsaes.com

Dpto. Finanzas | Accounting Dpt.
Tel. +34 976 479 542
finanzas@dicsaes.com

Dpto. Compras | Purchasing Dpt.
Tel. +34 976 464 107
compras@dicsaes.com

Oficina de almacén | Warehouse Dpt.
Tel. +34 976 464 101
almacen@dicsaes.com

www.dicsaes.com

DISTRIBUIDORA INTERNACIONAL CARMEN, S.A.U
Polígono Industrial Alcalde Caballero
C/ Virgen del Buen Acuerdo, s/n°. 50014 Zaragoza (Spain)
Tel. +34 976 46 10 46

DICSA
www.dicsaes.com

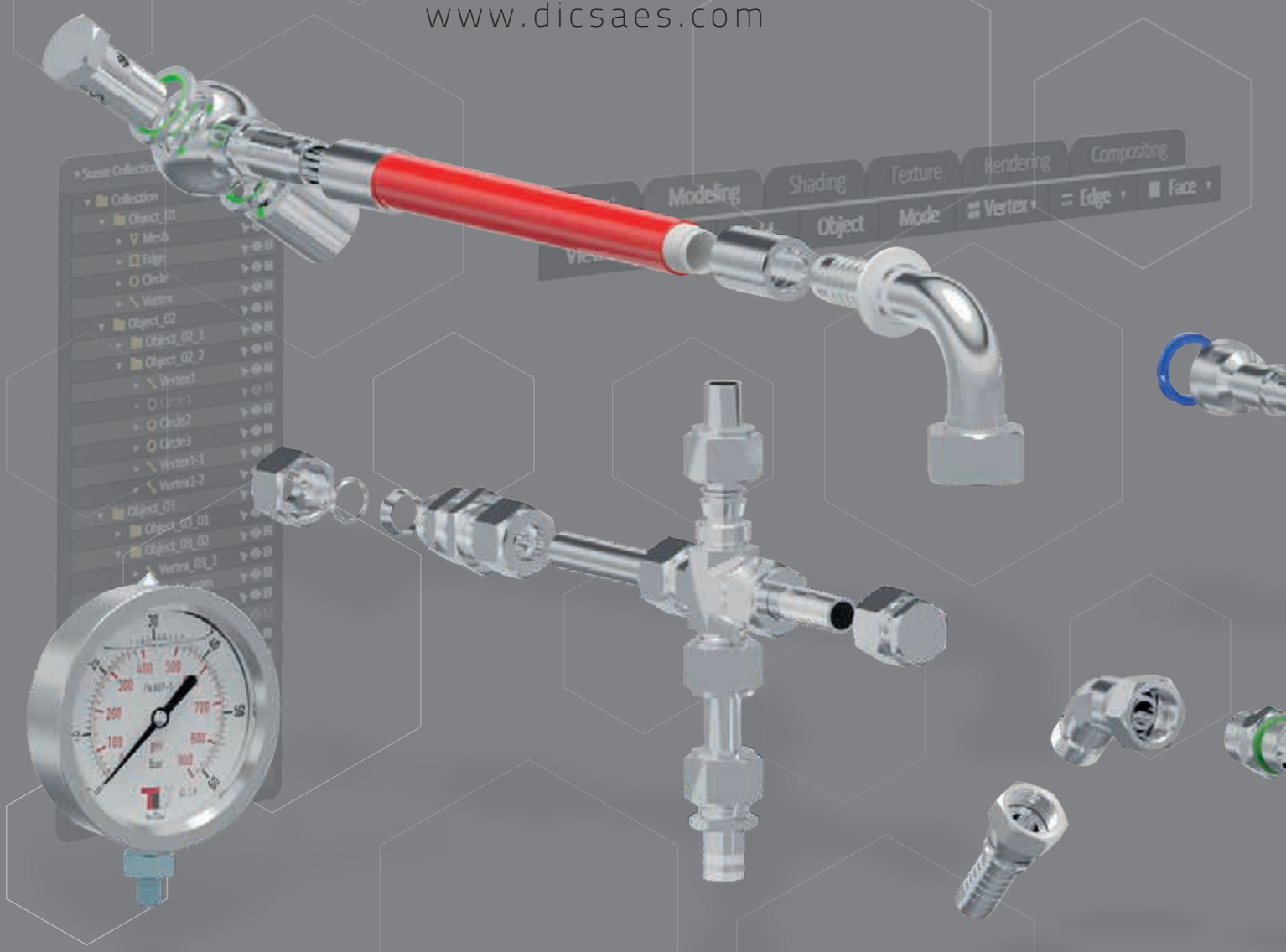

DICSA ITALIA SRL
Via Emilia Ovest 1179/c
41123 Modena (Italia)
Tel. +39 059 820 179
italia@dicsaes.com

DICSA AMERICA LLC
875 NE 191 STR.
STE 302 Aventura. FL 33180
Tel. 786-358-6662
Whatsapp: +34 617548815
america@dicsaes.com

DICSA DEUTSCHLAND
Logiststihsentrum GmSH
Thomas Dachser Str. 1 ·
76316 Malsch (Alemania)
Tel. +34 976 464 106
export@dicsaes.com

DICSA LATAM
Tel. +34 976 464 106
america@dicsaes.com

DICSA ASIA-PACIFIC
Tel. +34 976 464 106
asia-pacific@dicsaes.com

DICSA TÜRKIYE
Tel. 90 533 080 67 08
turkiye@dicsaes.com

2024